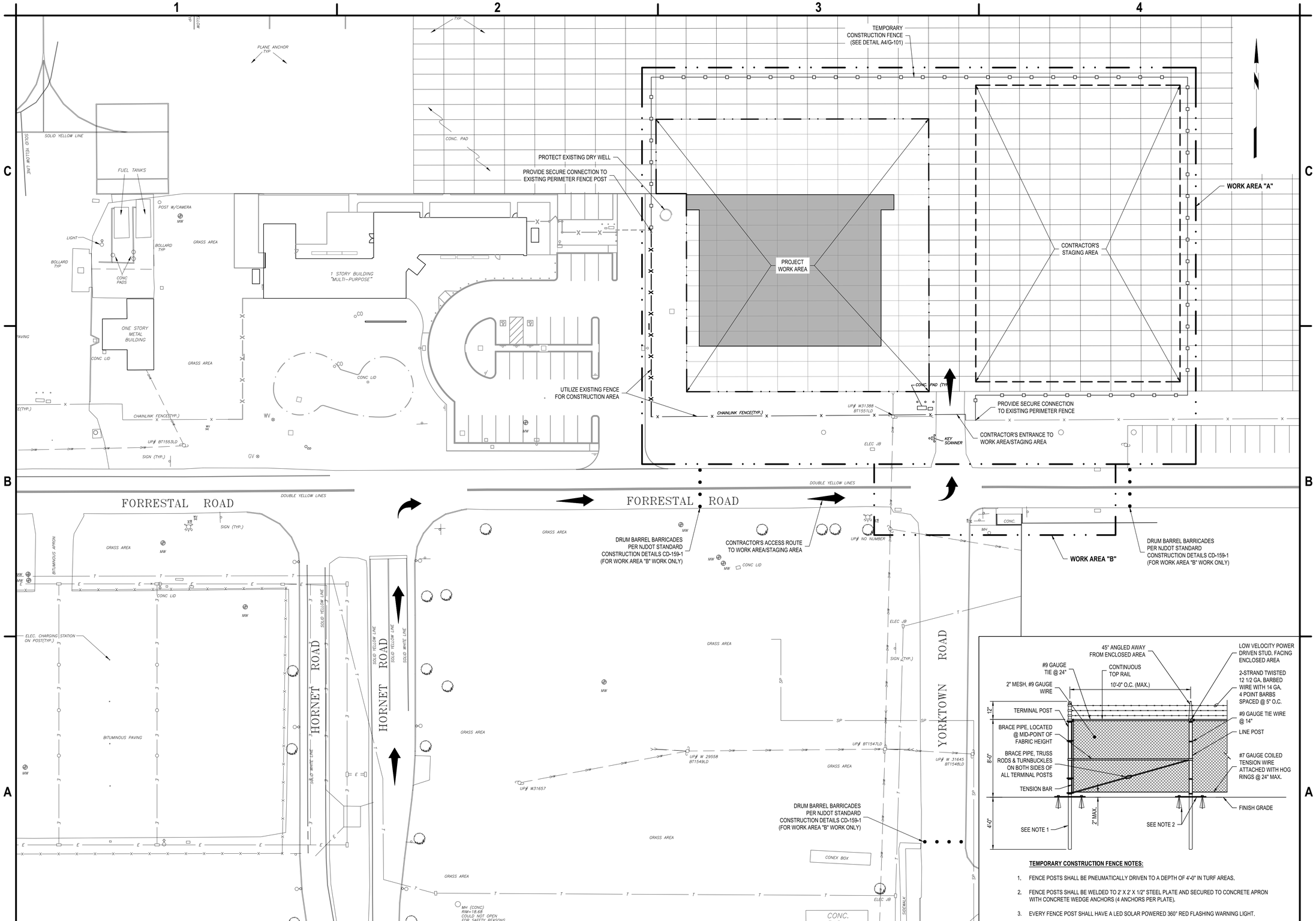

TEMPORARY CONSTRUCTION FENCE NOTES:

1. FENCE POSTS SHALL BE PNEUMATICALLY DRIVEN TO A DEPTH OF 4'-0" IN TURF AREAS.
2. FENCE POSTS SHALL BE WELDED TO 2' X 2' X 1/2" STEEL PLATE AND SECURED TO CONCRETE APRON WITH CONCRETE WEDGE ANCHORS (4 ANCHORS PER PLATE).
3. EVERY FENCE POST SHALL HAVE A LED SOLAR POWERED 360° RED FLASHING WARNING LIGHT.

A1 CONSTRUCTION PLAN
SCALE: 1" = 30'-0"

A4 TEMPORARY CONSTRUCTION FENCE DETAIL
SCALE: NOT TO SCALE

C&S COMPANIES®
C&S Engineers, Inc.
1600 Market Street,
Suite 3450
Philadelphia, PA 19103
Phone: (215) 709-4340
www.cscos.com

STATE OF NEW JERSEY RICHARD N. MCLAUGHLIN No. 24GE05298800 LICENSED PROFESSIONAL ENGINEER
May 8, 2024

DRBA DELAWARE RIVER & BAY AUTHORITY

WWD HANGAR DESIGN
DELAWARE RIVER AND BAY AUTHORITY
505 FORESTAL ROAD
CAPE MAY, NJ 08242

MARK	DATE	DESCRIPTION

REVISIONS

PROJECT NO:	872.013.088
DATE:	MARCH 2024
DRAWN BY:	M. ZINGARO
DESIGNED BY:	R. MCLAUGHLIN
CHECKED BY:	S.H. SHOVA

CONTRACTOR SHALL VERIFY ALL CONDITIONS ON JOB SITE & NOTIFY THE OWNER OF ANY VARIATIONS FROM DIMENSIONS SHOWN ON THESE DRAWINGS BEFORE PROCEEDING WITH ANY CONSTRUCTION.

CONSTRUCTION PLAN

G-002

Copyright ©

Mar 08, 2024 - 12:36pm
F:\Project\872_DELAWARE RIVER & BAY AUTHORITY\872013088 WWD Hangar Design\Design\CADD\Sheet Files\872013088_G-002.dwg

2021 INTERNATIONAL BUILDING CODE NEW JERSEY EDITION

CHAPTER 3 - Use and Occupancy Classification

A. Classification & Use

- 311.2 (S-1) Moderate-Hazard Storage – Aircraft Hangar (Storage and Repair)

CHAPTER 4 – Special Detailed Requirements Based on Use

A. Section 412 Aircraft-Related Occupancies - Hangars
412.3.4 Heating Equipment
Equipment shall be in a 2 hr room unless suspended 10 ft min above wings/engine enclosures

412.3.6 Fire Suppression
Fire suppression is to be provided complying with NFPA 409
Table 412.3.6 - Type IIB Construction, 12,000 sf Max Area: Group III Classification

412.3.6.1 Hazardous Operations
Potential aircraft fuel capacity is over 1,600 gallons therefore a Group I or II fire suppression system is required in accordance with NFPA 409.

CHAPTER 5 – General Building Heights and Areas

A. General Height and Area Limitations
Groups S occupancy, Type IIB construction (Sprinklerered)

1. Building Height
   - Table 504.3 – Allowable Building Height in Feet Above Grade Plane
     Max.Height: 75 ft (41 ft Actual)

2. Number of Stories
   - Table 504.4 Allowable Number of Stories Allowable Above Grade Plane
     S-1: 4 (1 Actual)

3. Building Area (Gross)
   - Table 506.2 Maximum Allowable Area (S1)
     S-1: 70,000 sf per story (11,783 Actual)

CHAPTER 6 - Types of Construction

1. Table 601 – Fire-Resistance Rating Requirements for Building Elements, Type II B

• Structural Frame:	0 hour
• Bearing Walls	0 hour
• Non-Bearing Walls	0 hour
• Floor Construction:	0 hour
• Roof Construction:	0 hour

CHAPTER 8 – Interior Finishes

A. Interior Finishes

1. Table 803.13, Interior Wall and Ceiling Finish Requirements by Occupancy

- Group S-1, Sprinklered

- Exit enclosures and passageways:	C
- Corridors:	C
- Rooms and enclosed spaces:	C

CHAPTER 9 – Fire Protection and Life Safety Systems

A. Automatic Sprinklers
1. 903.2.9 Group S-1
   An automatic sprinkler system is not required for fire areas less than 12,000 square feet but will be required based on potential fuel capacity.

CHAPTER 10 – Means of Egress

A. Area Occupancy

1. Table 1004.5: Maximum Floor Area Allowances per Occupant
   - Aircraft Hangars: 500 sf Gross

2. Number of Occupants
   Storage Classification (S-1)
   - Aircraft Hangars: 11,783/500 = 24

B. Means of Egress

1. 1005.3.2 Other Egress Components
   - Sprinklered : 0.15 in per occupant

C. Number of Exits and Exit Access Doorways

1. Table 1006.2.1 Spaces with One Exit or Exit Access Doorway
   - Occupant Load > 29 persons – Minimum 2 exits required.

D. Exit Access
1. Table 1017.2
   - 250' maximum travel with sprinkler system

2021 NATIONAL STANDARD PLUMBING CODE NEW JERSEY EDITION

A. Plumbing Fixtures, Fixture Fittings, and Plumbing Appliances (Chapter 7)

1. Table 7.21.1 Note 19 – The requirements for multiple individual self-storage areas shall be permitted to be met by fixtures located in the facility's administration building. The administration office must be accessible during normal building hours.

Note: This facility is similar in that it is a storage area that will not be occupied. In addition facilities will be available to transients at the nearby terminal which is less than 500 feet away.

2021 INTERNATIONAL ENERGY CONSERVATION CODE

A. Cape May County – Climate Zone 4A

1. Table C402.1.4 Opaque Thermal Envelope Assembly Maximum Requirements, U-Factor Method

• Slab on Grade Floor – Unheated:	F-0.52
• Metal Building Walls Above Grade:	U-0.052 (R-20)
• Metal Framed Walls Above Grade:	U-0.64 (R-16)
• Metal Building Roof:	U-0.035 (R-29)
• Opaque Doors – Swinging	U-0.37
• Opaque Doors – Nonswinging:	U-0.31

2. Table C402.4 Building Envelope Fenestration

• Fixed Fenestration	U-Factor = 0.36
• SHGC (PF < 0.2)	Fixed = 0.36

A1 CODE COMPLIANCE REVIEW
SCALE: NOT TO SCALE

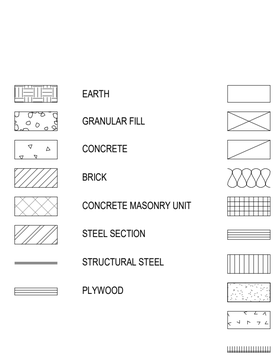

C3 MATERIAL LEGEND
SCALE: 1 : 1

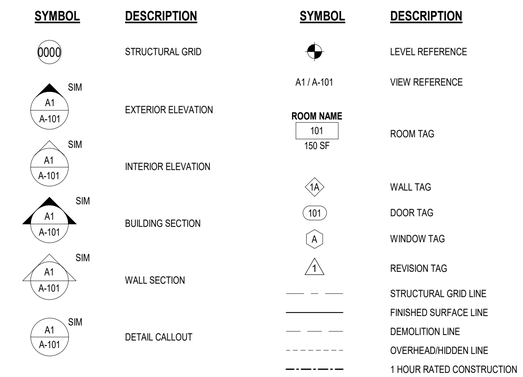

C4 SYMBOLS LEGEND
SCALE: NOT TO SCALE

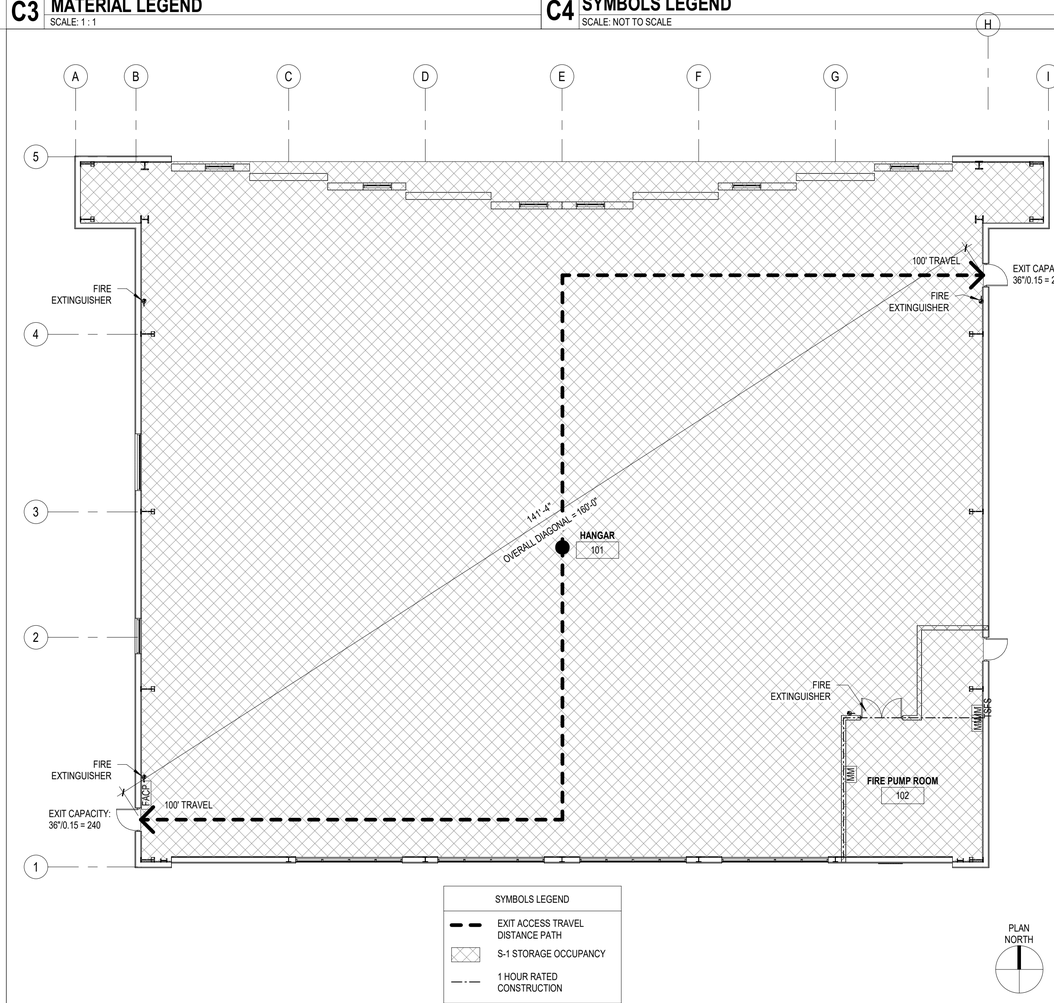

A3 FIRST FLOOR CODE COMPLIANCE PLAN
SCALE: 3/32" = 1'-0"

0 8' 16' 32'

C&S COMPANIES®
C&S Engineers, Inc.
1600 Market St.
Suite 3450
Philadelphia, PA 19103
Phone: (215) 709-4340
www.cscos.com

STATE OF NEW JERSEY
JOSEPH D. NAGOSKY
No. 24GE04741500
LICENSED PROFESSIONAL ENGINEER
May 8, 2024

DRBA
DELAWARE RIVER & BAY AUTHORITY

WWD HANGAR DESIGN
DELAWARE RIVER AND BAY AUTHORITY
505 FORESTAL ROAD
CAPE MAY, NJ 08242

MARK	DATE	DESCRIPTION

REVISIONS

PROJECT NO:	872.013.088
DATE:	MARCH 2024
DRAWN BY:	M.E. BARNES
DESIGNED BY:	M.E. BARNES
CHECKED BY:	M.W. LAMONTAGNE

CONTRACTOR SHALL VERIFY ALL CONDITIONS ON JOB SITE & NOTIFY THE OWNER OF ANY VARIATIONS FROM DIMENSIONS SHOWN ON THESE DRAWINGS BEFORE PROCEEDING WITH ANY CONSTRUCTION.

CODE COMPLIANCE REVIEW, LEGENDS AND DETAILS

G-003

Copyright ©

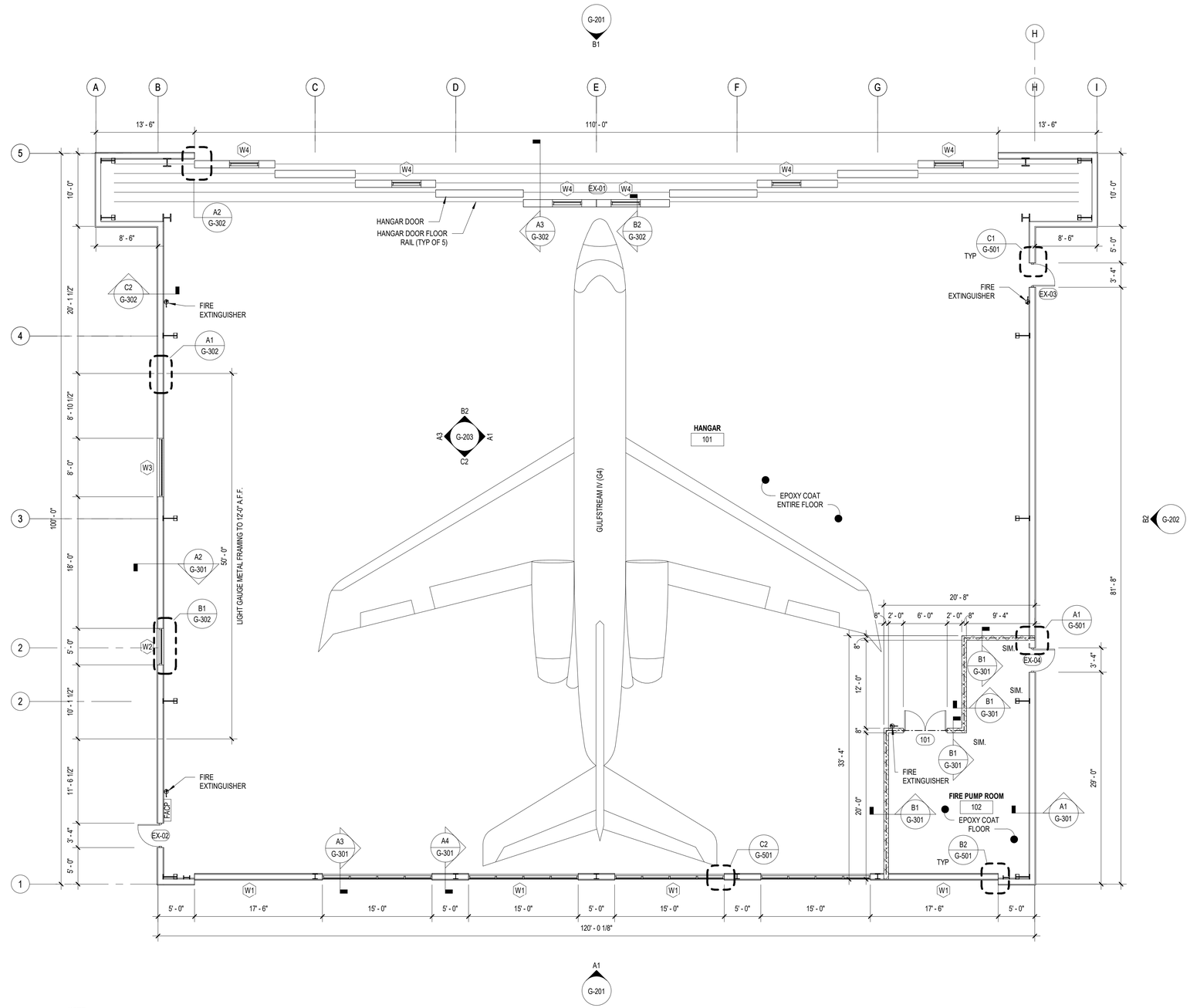

NOTE:
ALL ITEMS NOT LIMITED TO BUT CALLED OUT IN DETAILING AS "PEMB" ARE STRUCTURAL MEMBERS TO BE PROVIDED AS PART OF THE PRE-ENGINEERED METAL BUILDING PACKAGE.

A1 FIRST FLOOR PLAN
SCALE: 1/8" = 1'-0"

0 4' 8' 16'

C&S COMPANIES®
C&S Engineers, Inc.
1600 Market St.
Suite 3450
Philadelphia, PA 19103
Phone: (215) 709-4340
www.cscos.com

STATE OF NEW JERSEY
JOSEPH D. NAGGAY
No. 24GE04741500
LICENSED PROFESSIONAL ENGINEER
May 8, 2024

DRBA
DELAWARE RIVER & BAY AUTHORITY

WWD HANGAR DESIGN
DELAWARE RIVER AND BAY AUTHORITY
505 FORESTAL ROAD
CAPE MAY, NJ 08242

MARK	DATE	DESCRIPTION

REVISIONS

PROJECT NO:	872.013.088
DATE:	MARCH 2024
DRAWN BY:	M.E. BARNES
DESIGNED BY:	M.E. BARNES
CHECKED BY:	M.W. LAMONTAGNE

CONTRACTOR SHALL VERIFY ALL CONDITIONS ON JOB SITE & NOTIFY THE OWNER OF ANY VARIATIONS FROM DIMENSIONS SHOWN ON THESE DRAWINGS BEFORE PROCEEDING WITH ANY CONSTRUCTION.

FIRST FLOOR PLAN

G-101

Copyright ©

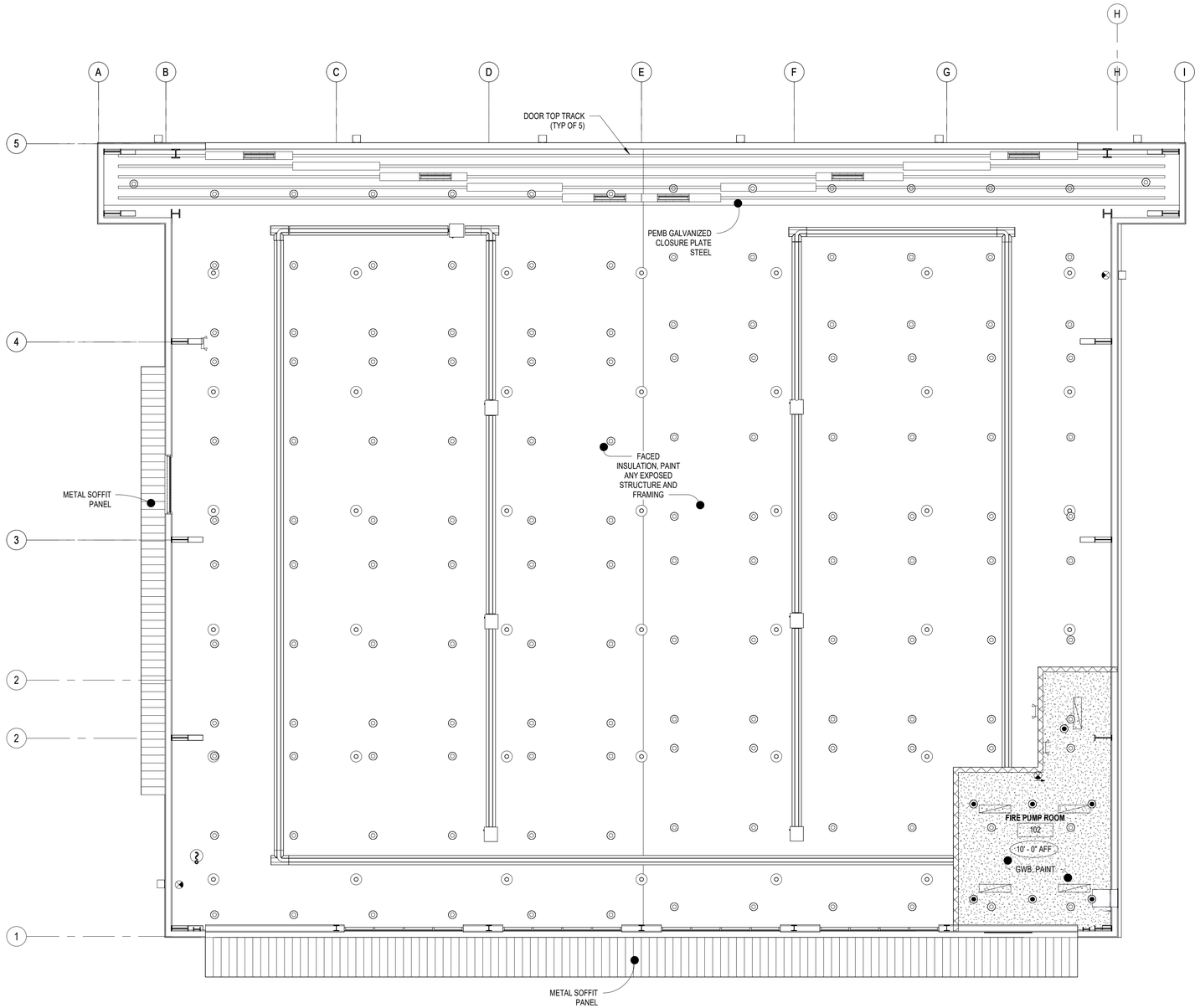

REFLECTED CEILING PLAN LEGEND

- PENDANT LIGHT FIXTURE, SEE ELECTRICAL
- EXIT LUMINAIRE, SEE ELECTRICAL
- RADIANT HEATER, SEE MECHANICAL
- UPRIGHT SPRINKLER HEAD, SEE FIRE PROTECTION
- PENDENT SPRINKLER HEAD, SEE FIRE PROTECTION

NOTE:
PLAN IS PROVIDED FOR INFORMATIONAL PURPOSES ONLY.

PLAN NORTH

A1 **FIRST FLOOR REFLECTED CEILING PLAN**
SCALE: 1/8" = 1'-0"

0 4' 8' 16'

C&S COMPANIES®
C&S Engineers, Inc.
1600 Market St.
Suite 3450
Philadelphia, PA 19103
Phone: (215) 709-4340
www.cscos.com

STATE OF NEW JERSEY
JOSEPH D. NAGOSKY
No. 24GE04741500
LICENSED PROFESSIONAL ENGINEER
May 8, 2024

DRBA
DELAWARE RIVER & BAY AUTHORITY

WWD HANGAR DESIGN
DELAWARE RIVER AND BAY AUTHORITY
505 FORESTAL ROAD
CAPE MAY, NJ 08242

MARK	DATE	DESCRIPTION

REVISIONS

PROJECT NO:	872.013.088
DATE:	MARCH 2024
DRAWN BY:	M.E. BARNES
DESIGNED BY:	M.E. BARNES
CHECKED BY:	M.W. LAMONTAGNE

CONTRACTOR SHALL VERIFY ALL CONDITIONS ON JOB SITE & NOTIFY THE OWNER OF ANY VARIATIONS FROM DIMENSIONS SHOWN ON THESE DRAWINGS BEFORE PROCEEDING WITH ANY CONSTRUCTION.

REFLECTED CEILING PLAN

G-102

Copyright ©

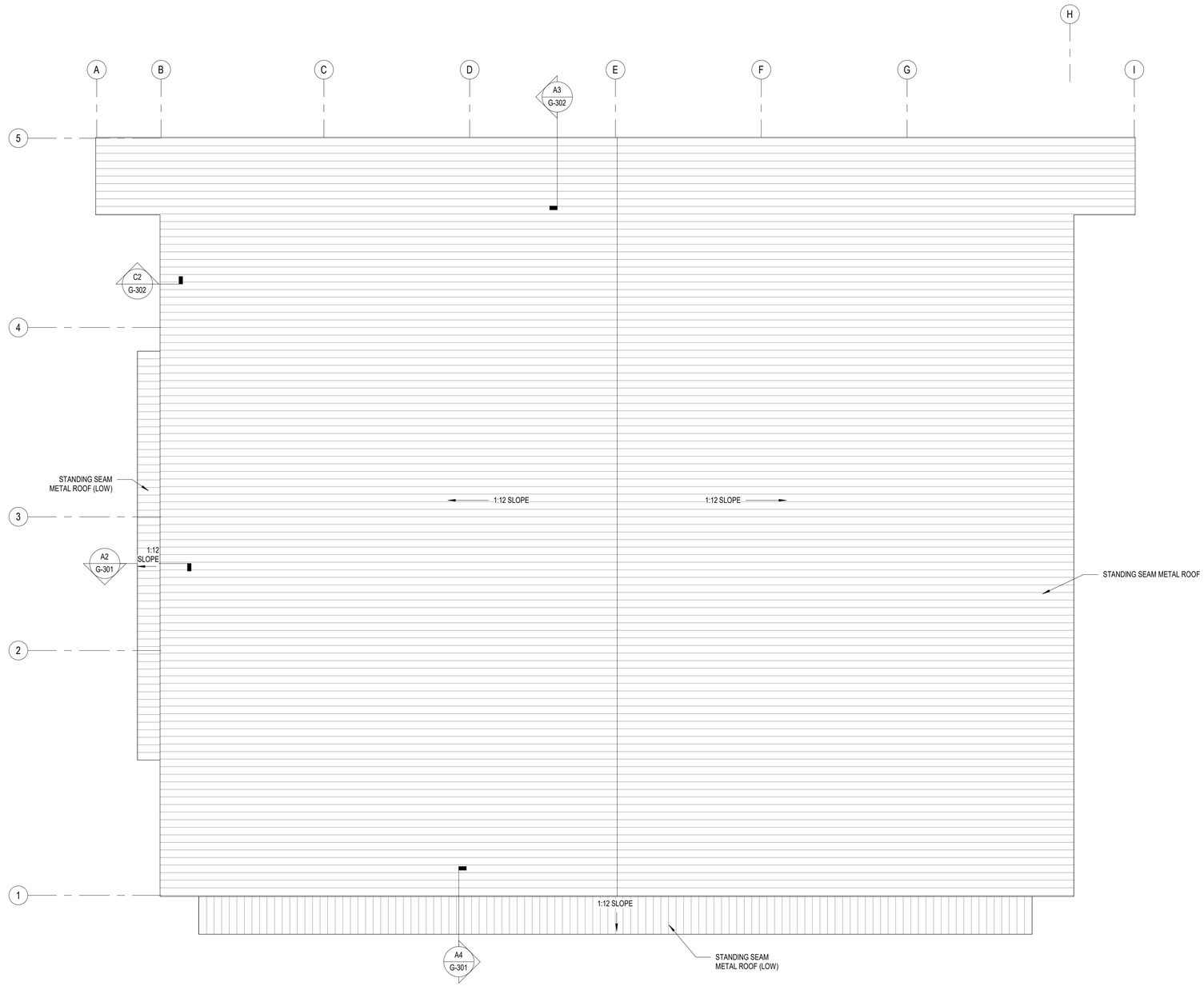

PLAN
NORTH

A1 **ROOF PLAN**
SCALE: 1/8" = 1'-0"

0 4' 8' 16'

C&S COMPANIES®
C&S Engineers, Inc.
1600 Market St.
Suite 3450
Philadelphia, PA 19103
Phone: (215) 709-4340
www.cscos.com

STATE OF NEW JERSEY
JOSEPH D. NAGGAR
No. 24GE04741500
LICENSED PROFESSIONAL ENGINEER
May 8, 2024

DRBA
DELAWARE RIVER & BAY AUTHORITY

WWD HANGAR DESIGN
DELAWARE RIVER AND BAY AUTHORITY
505 FORESTAL ROAD
CAPE MAY, NJ 08242

MARK	DATE	DESCRIPTION

REVISIONS

PROJECT NO:	872.013.088
DATE:	MARCH 2024
DRAWN BY:	M.E. BARNES
DESIGNED BY:	M.E. BARNES
CHECKED BY:	M.W. LAMONTAGNE

CONTRACTOR SHALL VERIFY ALL CONDITIONS ON JOB SITE & NOTIFY THE OWNER OF ANY VARIATIONS FROM DIMENSIONS SHOWN ON THESE DRAWINGS BEFORE PROCEEDING WITH ANY CONSTRUCTION.

ROOF PLAN

G-103

Copyright ©

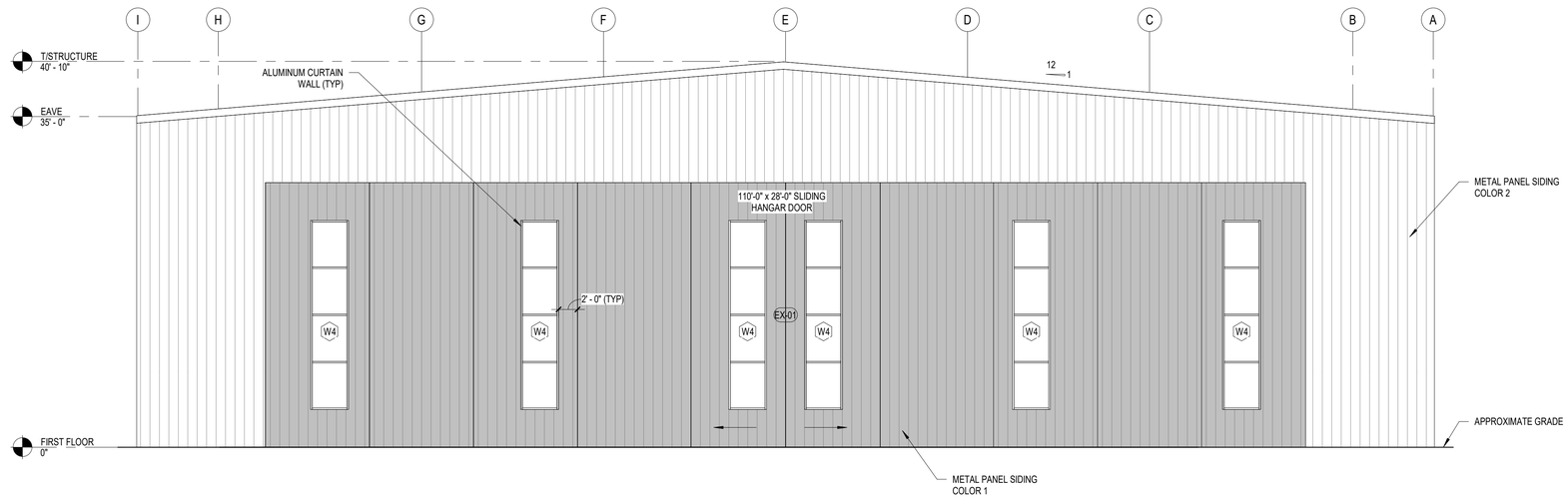

B1 NORTH ELEVATION
SCALE: 1/8" = 1'-0"

0 4' 8' 16'

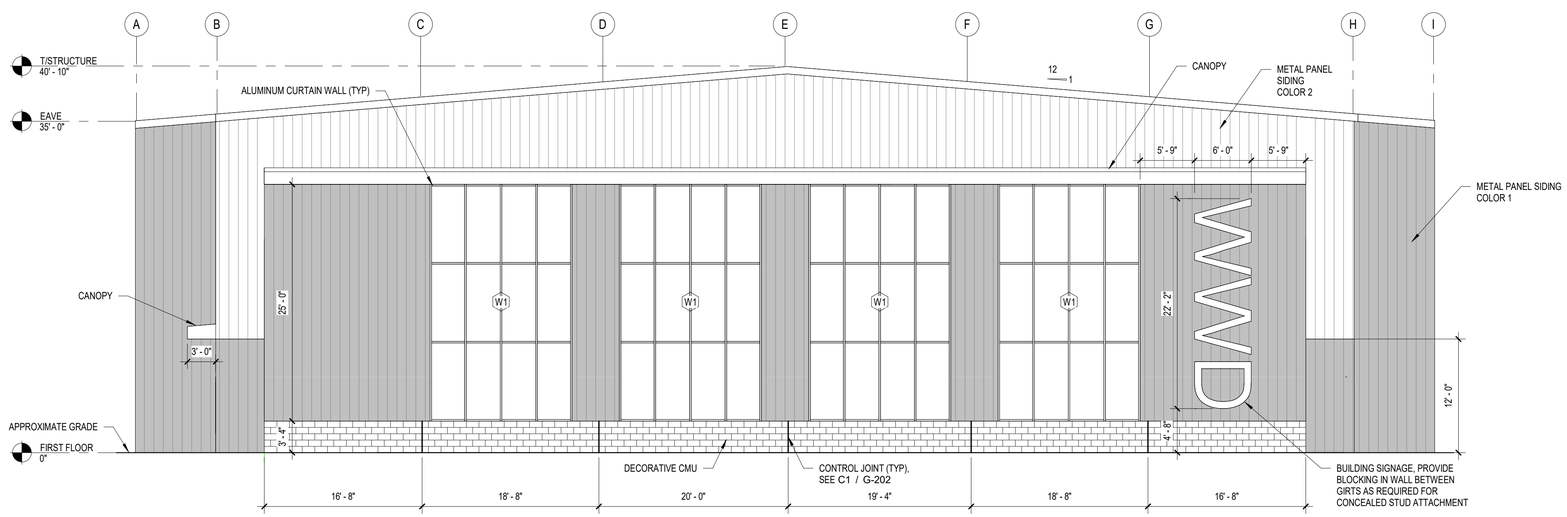

A1 SOUTH ELEVATION
SCALE: 1/8" = 1'-0"

0 4' 8' 16'

C&S COMPANIES®

C&S Engineers, Inc.
1600 Market St.
Suite 3450
Philadelphia, PA 19103
Phone: (215) 709-4340
www.cscos.com

STATE OF NEW JERSEY
JOSEPH D. NAGGIAR
No. 24GE04741500
LICENSED PROFESSIONAL ENGINEER
May 8, 2024

DRBA
DELAWARE RIVER & BAY AUTHORITY

WWD HANGAR DESIGN
DELAWARE RIVER AND BAY AUTHORITY
505 FORESTAL ROAD
CAPE MAY, NJ 08242

MARK	DATE	DESCRIPTION

REVISIONS

PROJECT NO:	872.013.088
DATE:	MARCH 2024
DRAWN BY:	M.E. BARNES
DESIGNED BY:	M.E. BARNES
CHECKED BY:	M.W. LAMONTAGNE

CONTRACTOR SHALL VERIFY ALL CONDITIONS ON JOB SITE & NOTIFY THE OWNER OF ANY VARIATIONS FROM DIMENSIONS SHOWN ON THESE DRAWINGS BEFORE PROCEEDING WITH ANY CONSTRUCTION.

EXTERIOR ELEVATIONS

G-201

Copyright ©

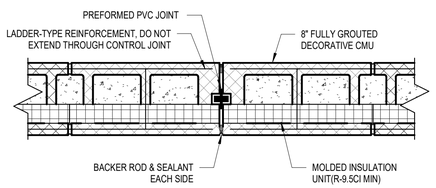

C1 CONTROL JOINT DETAIL
SCALE: 1 1/2" = 1'-0"

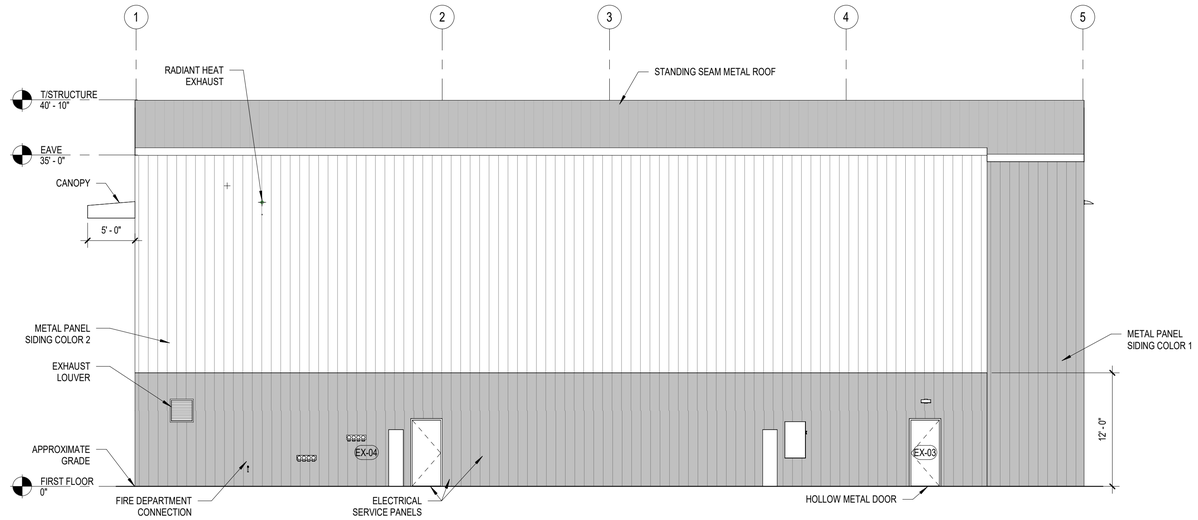

B2 EAST ELEVATION
SCALE: 1/8" = 1'-0"

0 4' 8' 16'

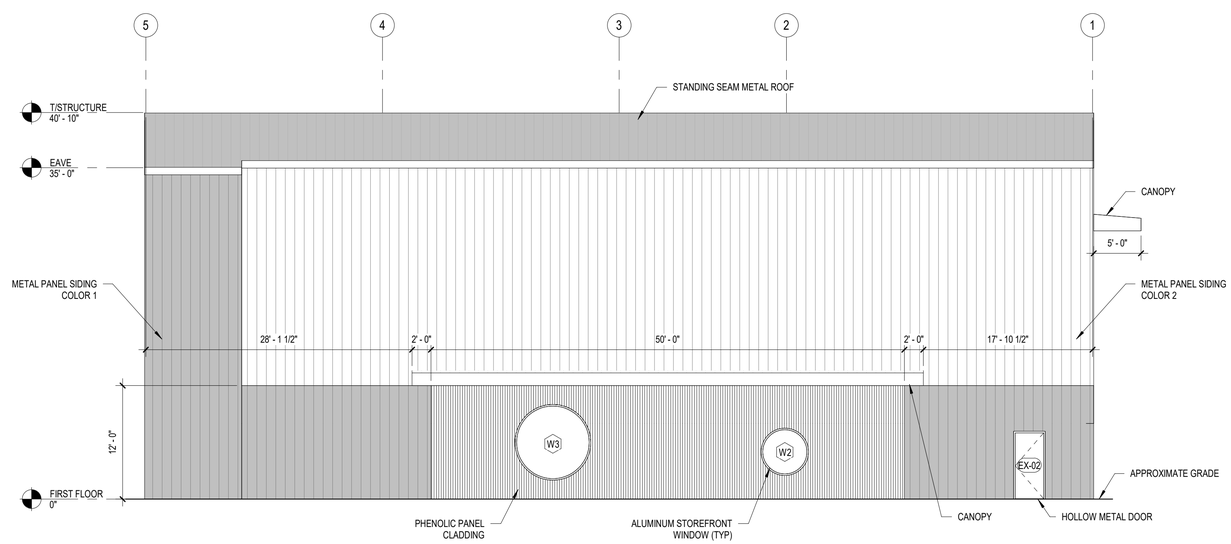

A2 WEST ELEVATION
SCALE: 1/8" = 1'-0"

0 4' 8' 16'

C&S COMPANIES®
C&S Engineers, Inc.
1600 Market St.
Suite 3450
Philadelphia, PA 19103
Phone: (215) 709-4340
www.cscos.com

STATE OF NEW JERSEY
JOSEPH D. NAGGIAR
No. 24GE04741500
LICENSED PROFESSIONAL ENGINEER
May 8, 2024

DRBA
DELAWARE RIVER & BAY AUTHORITY

WWD HANGAR DESIGN
DELAWARE RIVER AND BAY AUTHORITY
505 FORESTAL ROAD
CAPE MAY, NJ 08242

MARK	DATE	DESCRIPTION

REVISIONS

PROJECT NO:	872.013.088
DATE:	MARCH 2024
DRAWN BY:	M.E. BARNES
DESIGNED BY:	M.E. BARNES
CHECKED BY:	M.W. LAMONTAGNE

CONTRACTOR SHALL VERIFY ALL CONDITIONS ON JOB SITE & NOTIFY THE OWNER OF ANY VARIATIONS FROM DIMENSIONS SHOWN ON THESE DRAWINGS BEFORE PROCEEDING WITH ANY CONSTRUCTION.

EXTERIOR ELEVATIONS

G-202

Copyright ©

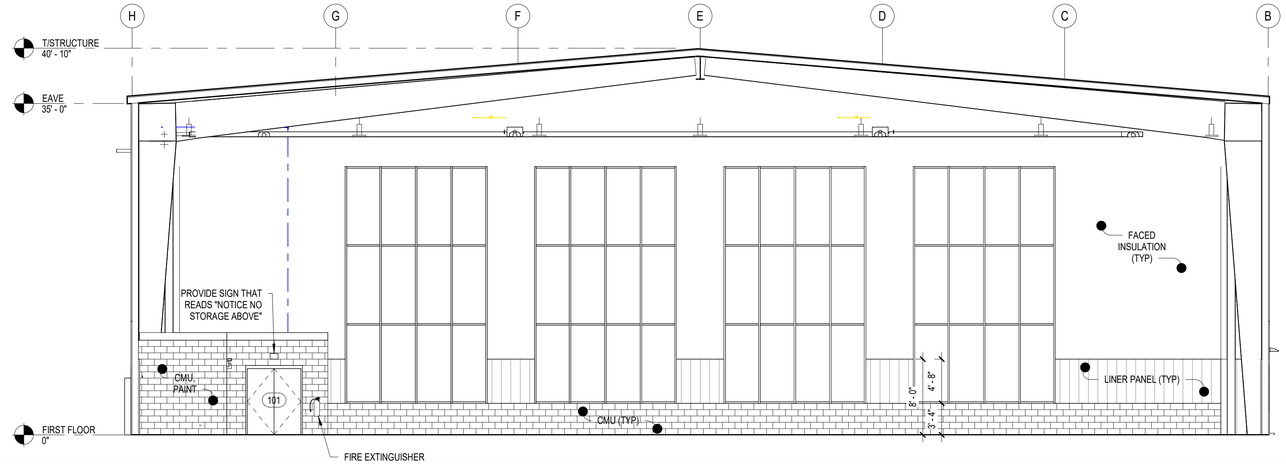

C2 SOUTH INTERIOR ELEVATION

SCALE: 1/8" = 1'-0"

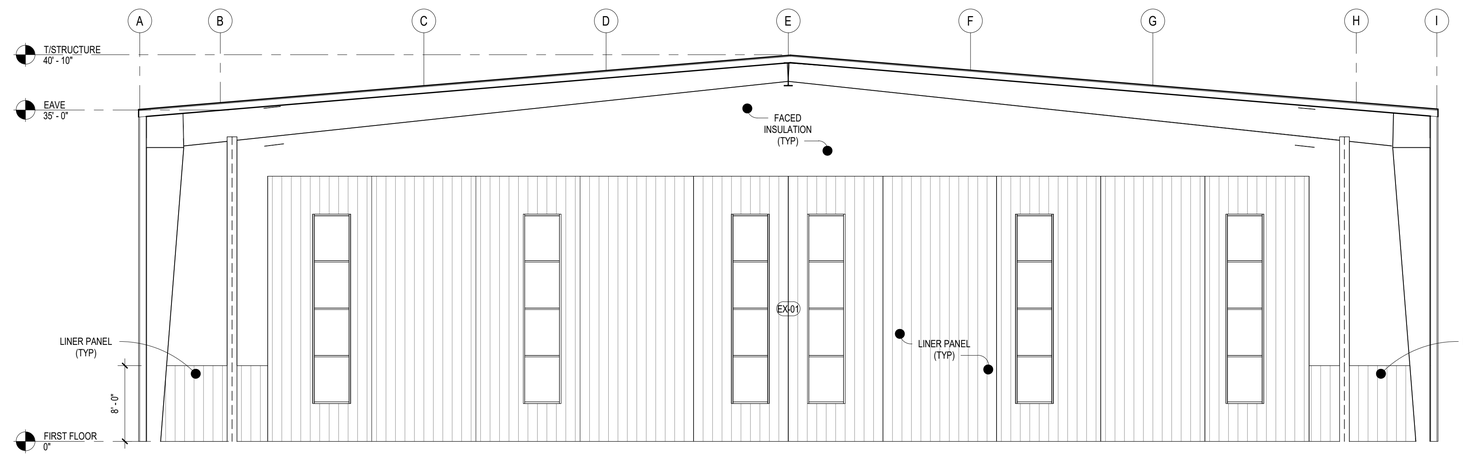

B2 NORTH INTERIOR ELEVATION

SCALE: 1/8" = 1'-0"

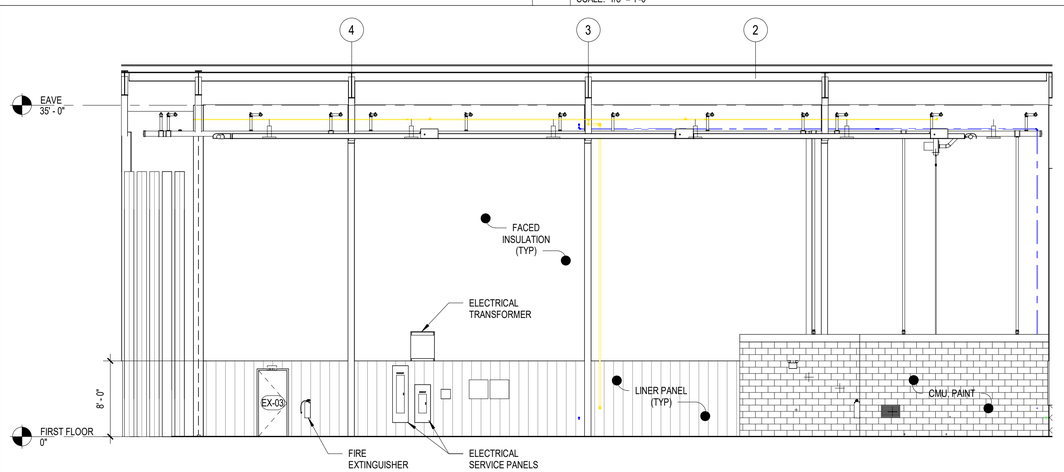

A1 EAST INTERIOR ELEVATION

SCALE: 1/8" = 1'-0"

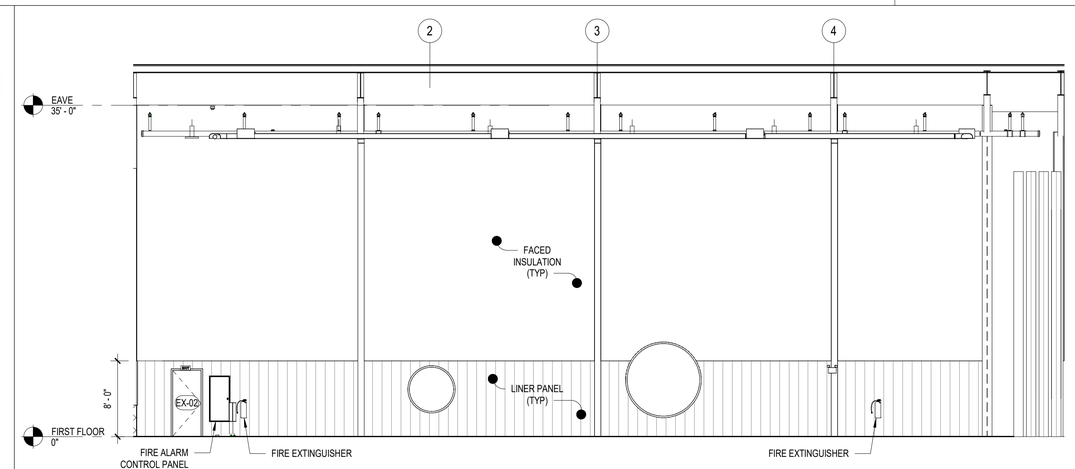

A3 WEST INTERIOR ELEVATION

SCALE: 1/8" = 1'-0"

C&S COMPANIES®

C&S Engineers, Inc.
1600 Market St.
Suite 3450
Philadelphia, PA 19103
Phone: (215) 709-4340
www.cscos.com

STATE OF NEW JERSEY
JOSEPH D. NAGOSKY
No. 24GE04741500
LICENSED PROFESSIONAL ENGINEER

May 8, 2024

DRBA
DELAWARE RIVER & BAY AUTHORITY

WWD HANGAR DESIGN
DELAWARE RIVER AND BAY AUTHORITY
505 FORESTAL ROAD
CAPE MAY, NJ 08242

MARK	DATE	DESCRIPTION

REVISIONS

PROJECT NO:	872.013.088
DATE:	MARCH 2024
DRAWN BY:	M.E. BARNES
DESIGNED BY:	M.E. BARNES
CHECKED BY:	M.W. LAMONTAGNE

CONTRACTOR SHALL VERIFY ALL CONDITIONS ON JOB SITE & NOTIFY THE OWNER OF ANY VARIATIONS FROM DIMENSIONS SHOWN ON THESE DRAWINGS BEFORE PROCEEDING WITH ANY CONSTRUCTION.

INTERIOR ELEVATIONS

G-203

Copyright ©

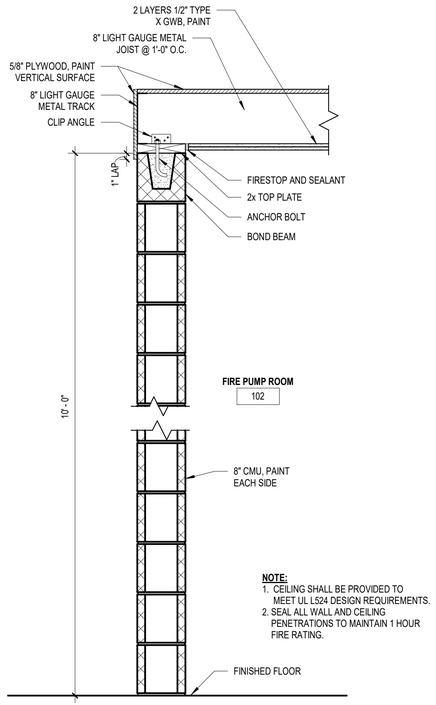

B1 FIRE PUMP ROOM WALL SECTION
SCALE: 1" = 1'-0"

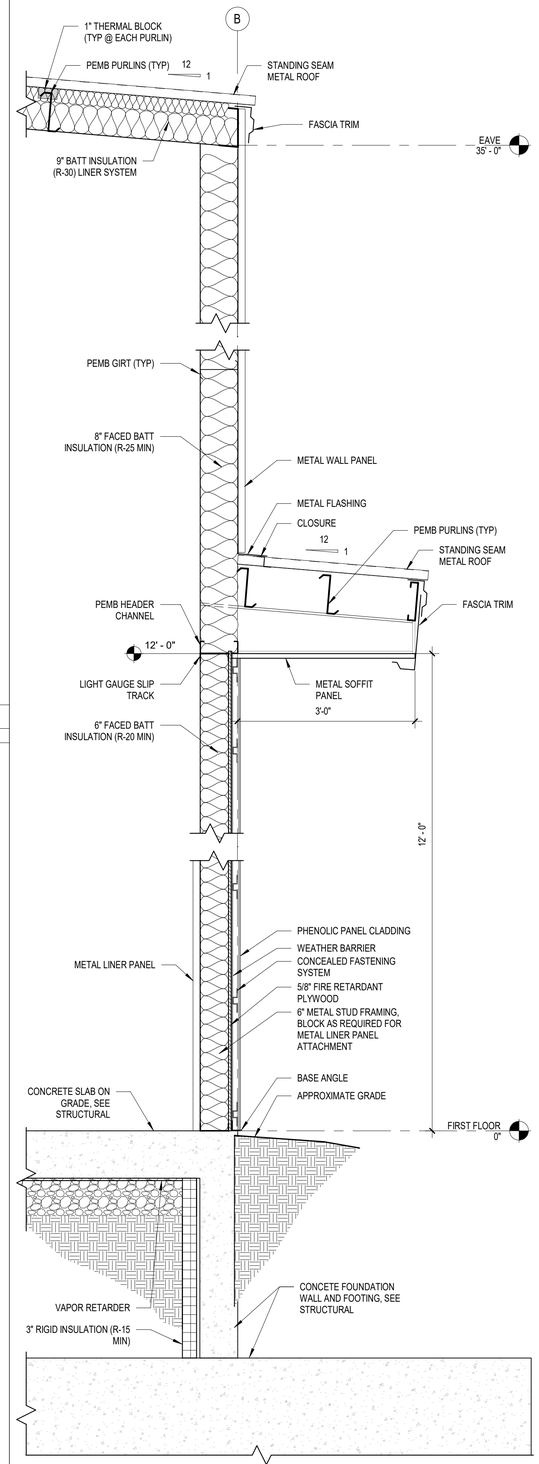

A2 WALL SECTION AT PHENOLIC PANEL CLADDING
SCALE: 3/4" = 1'-0"

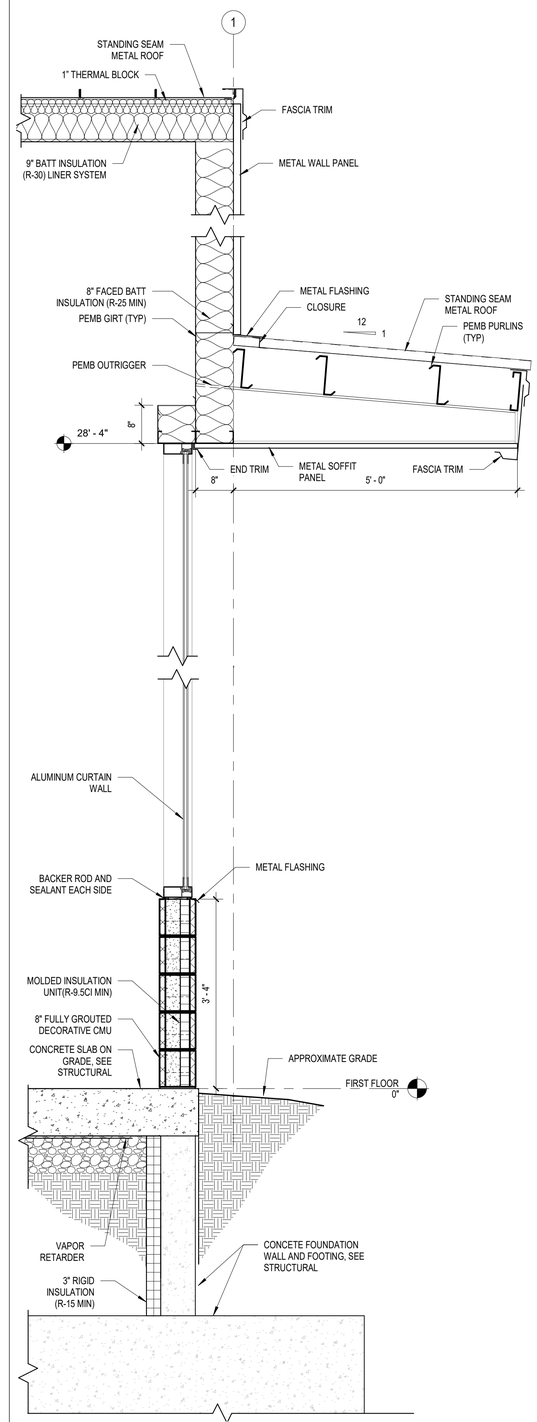

A3 WALL SECTION AT CMU AND CURTAIN WALL
SCALE: 3/4" = 1'-0"

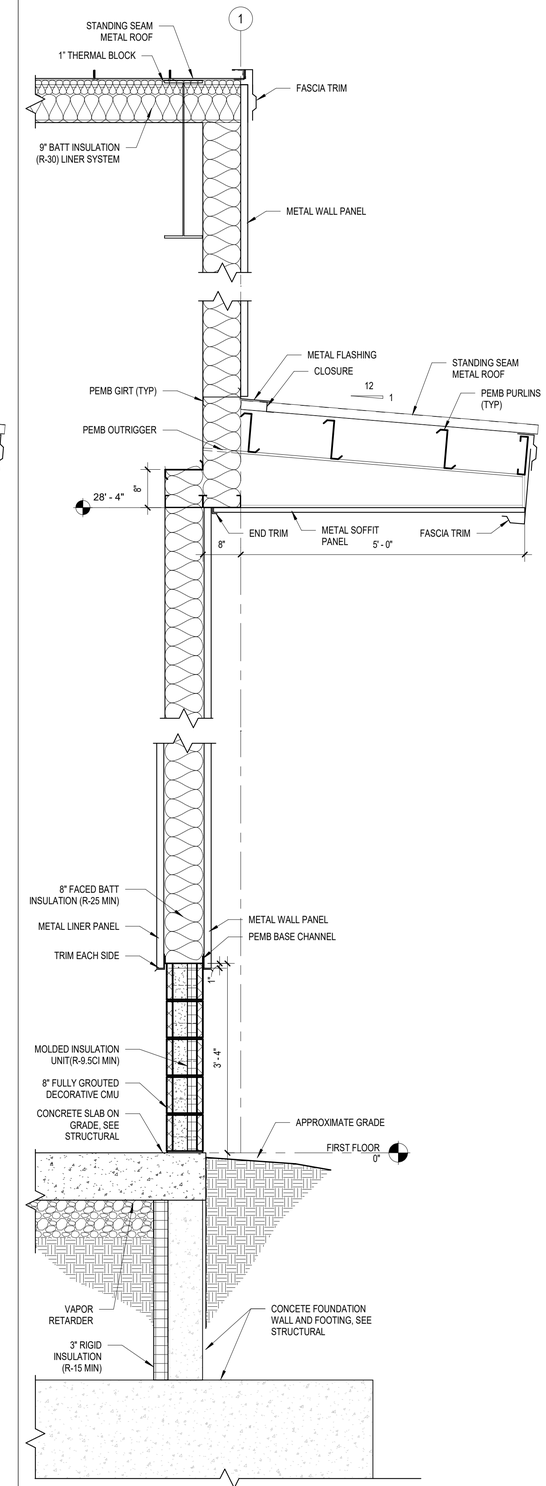

A4 WALL SECTION AT CMU
SCALE: 3/4" = 1'-0"

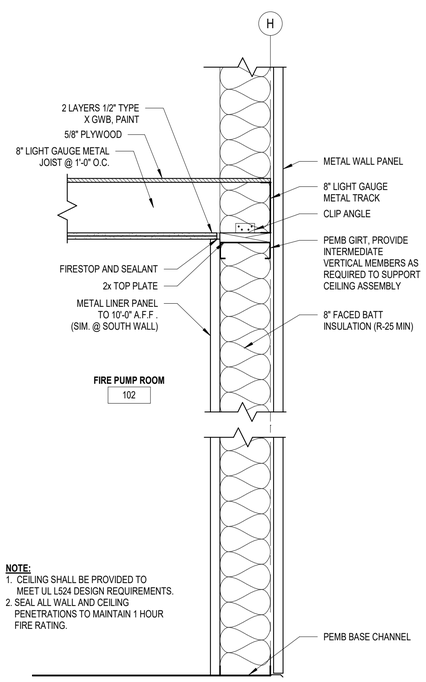

A1 FIRE PUMP ROOM EXTERIOR WALL SECTION
SCALE: 1" = 1'-0"

C&S COMPANIES®
C&S Engineers, Inc.
1600 Market St.
Suite 3450
Philadelphia, PA 19103
Phone: (215) 709-4340
www.cscos.com

STATE OF NEW JERSEY
JOSEPH D. NAGOSKY
No. 24GE04741500
LICENSED PROFESSIONAL ENGINEER
May 8, 2024

DRBA
DELAWARE RIVER & BAY AUTHORITY

WWD HANGAR DESIGN
DELAWARE RIVER AND BAY AUTHORITY
505 FORESTAL ROAD
CAPE MAY, NJ 08242

MARK	DATE	DESCRIPTION

REVISIONS

PROJECT NO:	872.013.088
DATE:	MARCH 2024
DRAWN BY:	M.E. BARNES
DESIGNED BY:	M.E. BARNES
CHECKED BY:	M.W. LAMONTAGNE

CONTRACTOR SHALL VERIFY ALL CONDITIONS ON JOB SITE & NOTIFY THE OWNER OF ANY VARIATIONS FROM DIMENSIONS SHOWN ON THESE DRAWINGS BEFORE PROCEEDING WITH ANY CONSTRUCTION.

WALL SECTIONS

G-301

Copyright ©

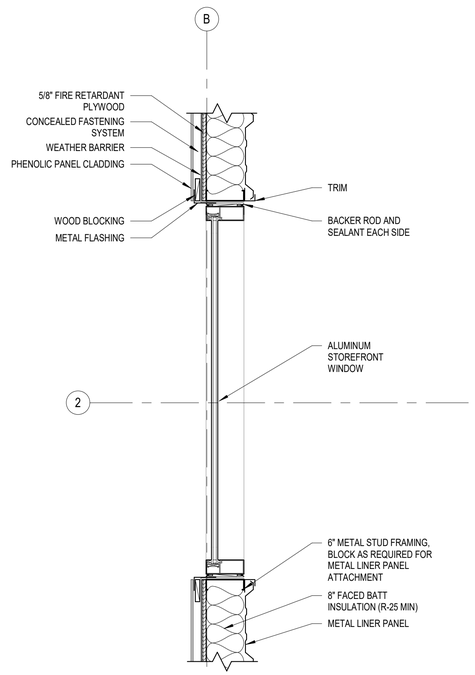

B1 STOREFRONT WINDOW PLAN DETAIL AT PHENOLIC PANELS

SCALE: 1" = 1'-0"

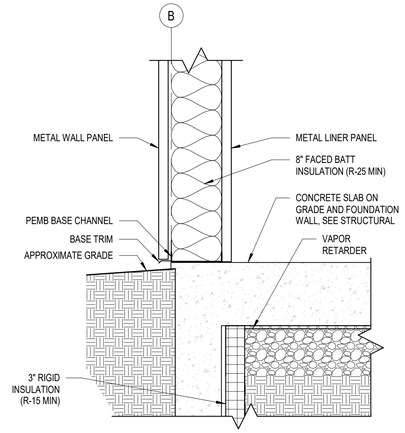

C2 TYPICAL WALL SECTION

SCALE: 1" = 1'-0"

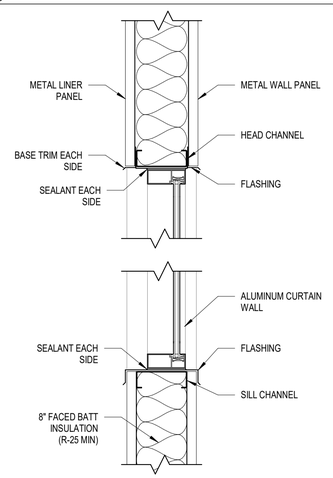

B2 HANGAR DOOR SECTION AT ALUMINUM CURTAIN WALL

SCALE: 1" = 1'-0"

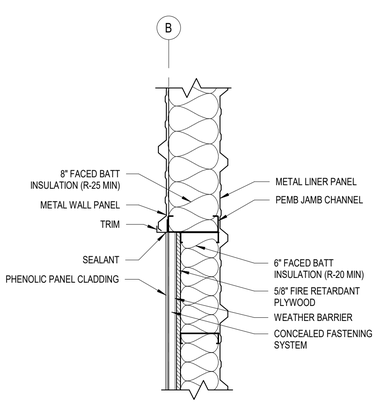

A1 PANEL TRANSITION DETAIL

SCALE: 1" = 1'-0"

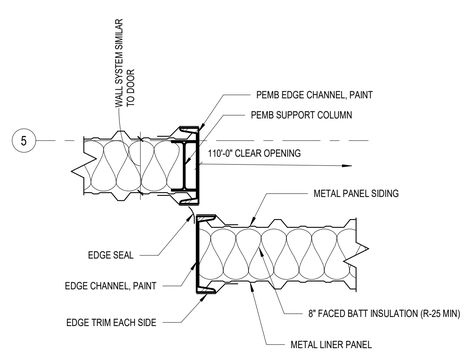

A2 HANGAR DOOR PLAN DETAIL

SCALE: 1" = 1'-0"

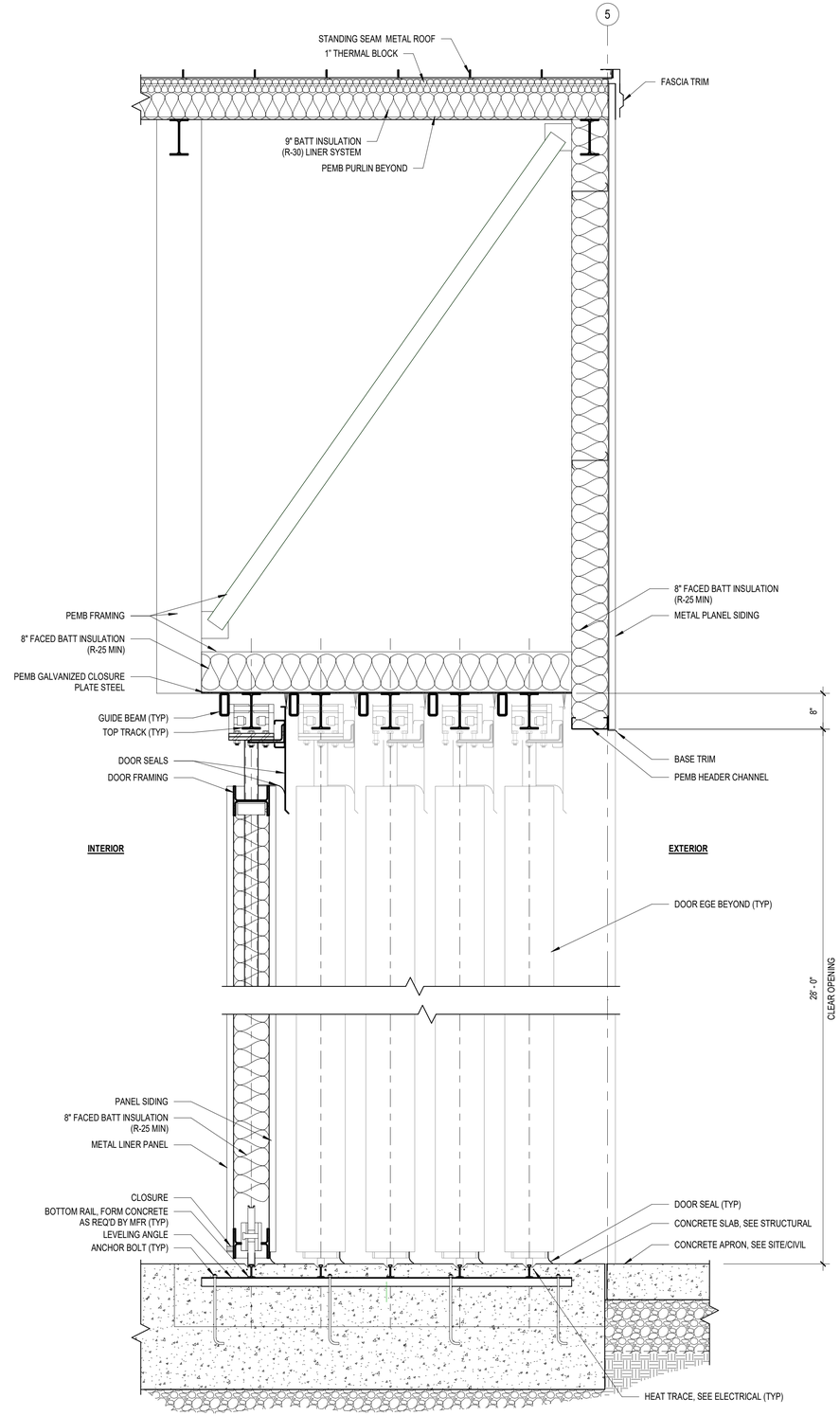

A3 HANGAR DOOR SECTION

SCALE: 3/4" = 1'-0"

C&S COMPANIES®
C&S Engineers, Inc.
1600 Market St.
Suite 3450
Philadelphia, PA 19103
Phone: (215) 709-4340
www.cscos.com

STATE OF NEW JERSEY
JOSEPH D. NAGOSKY
No. 24GE04741500
LICENSED PROFESSIONAL ENGINEER
May 8, 2024

DRBA
DELAWARE RIVER & BAY AUTHORITY

WWD HANGAR DESIGN
DELAWARE RIVER AND BAY AUTHORITY
505 FORESTAL ROAD
CAPE MAY, NJ 08242

MARK	DATE	DESCRIPTION

REVISIONS

PROJECT NO:	872.013.088
DATE:	MARCH 2024
DRAWN BY:	M.E. BARNES
DESIGNED BY:	M.E. BARNES
CHECKED BY:	M.W. LAMONTAGNE

CONTRACTOR SHALL VERIFY ALL CONDITIONS ON JOB SITE & NOTIFY THE OWNER OF ANY VARIATIONS FROM DIMENSIONS SHOWN ON THESE DRAWINGS BEFORE PROCEEDING WITH ANY CONSTRUCTION.

SECTION AND DETAILS

G-302

Copyright ©

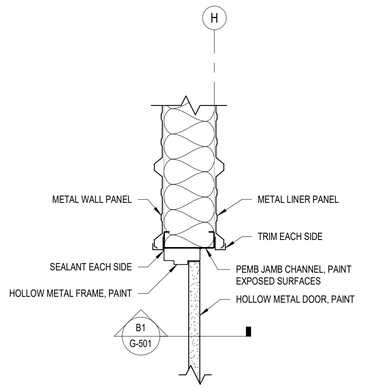

C1 MAN DOOR JAMB DETAIL
SCALE: 1" = 1'-0"

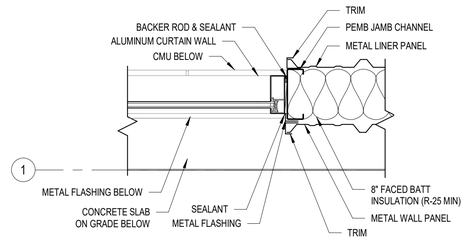

C2 CURTAIN WALL PLAN DETAIL
SCALE: 1" = 1'-0"

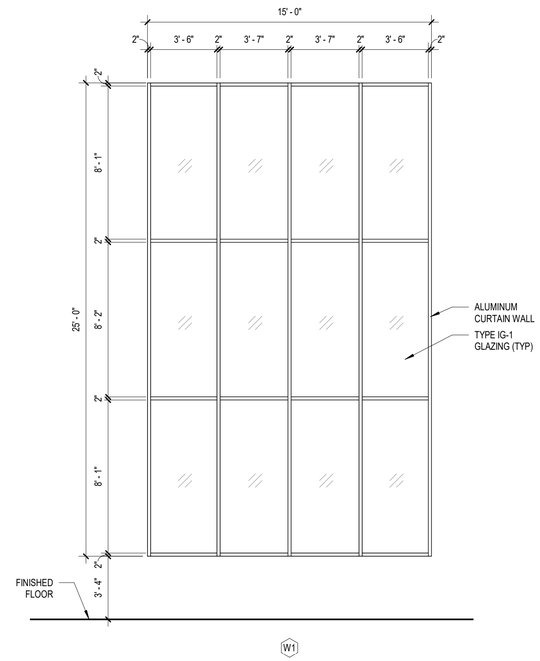

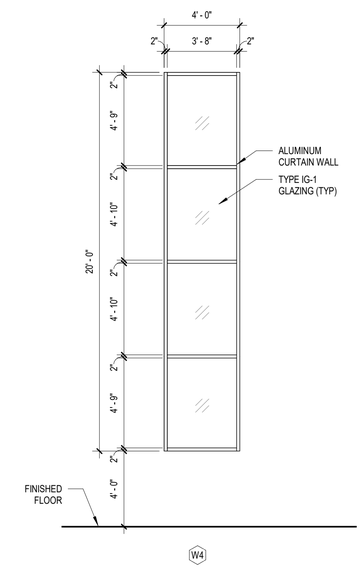

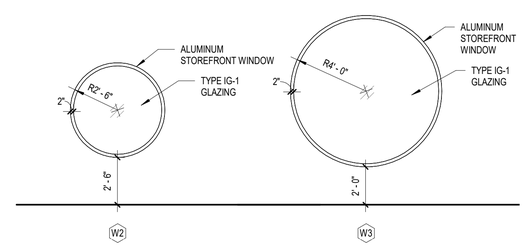

B3 ALUMINUM STOREFRONT WINDOW AND CURTAIN WALL TYPES
SCALE: NOT TO SCALE

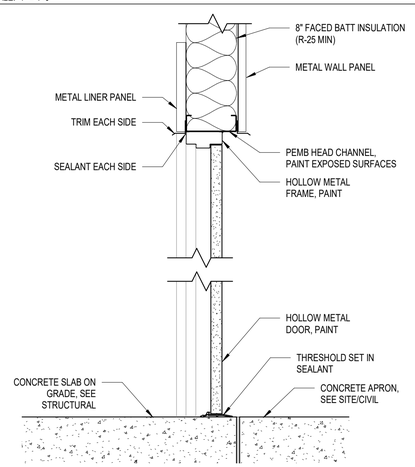

B1 MAN DOOR HEAD AND SILL DETAILS
SCALE: 1" = 1'-0"

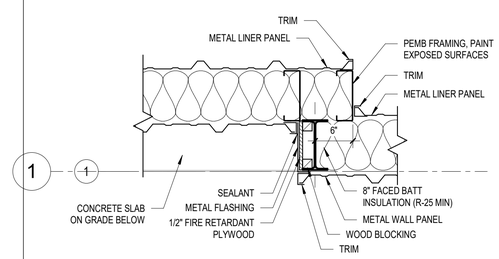

B2 WALL TRANSITION PLAN DETAIL
SCALE: 1" = 1'-0"

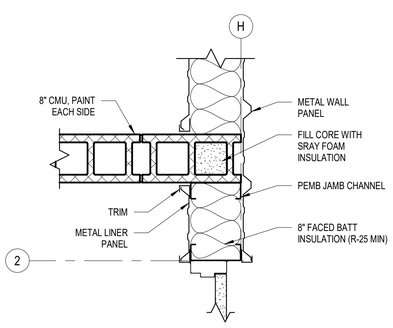

A1 WALL INTERSECTION PLAN DETAIL
SCALE: 1" = 1'-0"

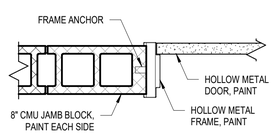

JAMB DETAIL

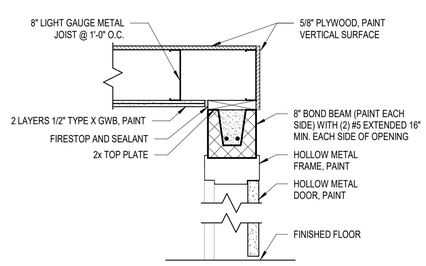

HEAD AND SILL DETAILS

A2 INTERIOR DOOR HEAD, JAMB AND SILL DETAILS
SCALE: 1" = 1'-0"

DOOR SCHEDULE

DOOR NO.	ROOM NO.	DOOR TYPE	WIDTH	HEIGHT	DOOR MATERIAL	DOOR FINISH	FRAME TYPE	FRAME MATERIAL	FRAME FINISH	HEAD DETAIL	JAMB DETAIL	SILL DETAIL	HARDWARE SET	FIRE RATING	NOTES
101	101	DT-1	5' - 8"	7' - 0"	HM	PT	FT-2	HM	PT	A2/A-501	A2/A-302	A2/A-501	H-2	1 (3/4 HR)	-
EX-01		SEE B1/A-201	110' - 0"	28' - 0"	MP	AS SPECIFIED	N/A	N/A	N/A	A3/A-302	A2/A-302	A3/A-302	AS SPECIFIED	-	-
EX-02	101	DT-1	3' - 0"	7' - 0"	HM	PT	FT-1	HM	PT	B1/A-501	C1/A-501	B1/A-501	H-1	-	-
EX-03	101	DT-1	3' - 0"	7' - 0"	HM	PT	FT-1	HM	PT	B1/A-501	C1/A-501	B1/A-501	H-1	-	-
EX-04	102	DT-1	3' - 0"	7' - 0"	HM	PT	FT-1	HM	PT	B1/A-501	C1/A-501	B1/A-501	H-1	-	-

ABBREVIATIONS:

HM - HOLLOW METAL
MP - METAL PANEL
PT - PAINT

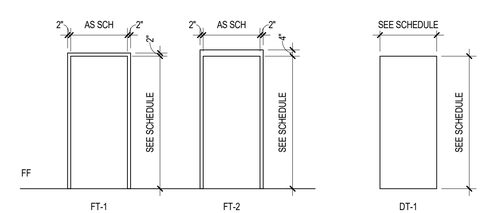

FRAME TYPES

DOOR TYPES

A3 DOOR SCHEDULE, DOOR AND FRAME TYPES
SCALE: NOT TO SCALE

C&S COMPANIES®
C&S Engineers, Inc.
1600 Market St.
Suite 3450
Philadelphia, PA 19103
Phone: (215) 709-4340
www.cscos.com

STATE OF NEW JERSEY
JOSEPH D. NAGOSKY
No. 24GE04741500
LICENSED PROFESSIONAL ENGINEER
May 8, 2024

DRBA DELAWARE RIVER & BAY AUTHORITY

WWD HANGAR DESIGN
DELAWARE RIVER AND BAY AUTHORITY
505 FORESTAL ROAD
CAPE MAY, NJ 08242

MARK	DATE	DESCRIPTION

REVISIONS

PROJECT NO: 872.013.088
DATE: MARCH 2024
DRAWN BY: M.E. BARNES
DESIGNED BY: M.E. BARNES
CHECKED BY: M.W. LAMONTAGNE

CONTRACTOR SHALL VERIFY ALL CONDITIONS ON JOB SITE & NOTIFY THE OWNER OF ANY VARIATIONS FROM DIMENSIONS SHOWN ON THESE DRAWINGS BEFORE PROCEEDING WITH ANY CONSTRUCTION.

DETAILS

G-501

Copyright ©

1. NO ATTEMPT HAS BEEN MADE TO SHOW ALL EXISTING UTILITIES AND THE LOCATION OF THOSE SHOWN ARE APPROXIMATE ONLY. THE UTILITIES HAVE BEEN SHOWN TO THE EXTENT KNOWN AND ARE OFFERED IN GOOD FAITH SOLELY FOR INFORMATIONAL PURPOSES. THEY MAY NOT REFLECT ACTUAL LOCATIONS AND MAY NOT BE INCLUSIVE. THE CONTRACTOR SHALL VERIFY THE TRUE LOCATION BEFORE COMMENCING WORK.
2. CONTRACTOR SHALL NOTIFY NEW JERSEY ONE CALL AT LEAST 72 HOURS PRIOR TO START OF WORK.
3. THE ACTUAL LOCATION AND ELEVATION OF ALL UTILITIES SHALL BE FIELD VERIFIED BY THE CONTRACTOR PRIOR TO THE START OF CONSTRUCTION.
4. CONTRACTOR SHALL COORDINATE ALL WORK WITH UTILITY COMPANIES.
5. IN THE EVENT OF DAMAGE TO EXISTING UTILITIES OR CABLES, THE ENGINEER, THE OWNER, AND THE AFFECTED UTILITIES REPRESENTATIVE SHALL BE NOTIFIED IMMEDIATELY.
6. THE CONTRACTOR SHALL REPAIR ALL DAMAGE TO UTILITIES OR CABLES, AS DIRECTED BY THE ENGINEER, IMMEDIATELY AND AT THE CONTRACTOR'S EXPENSE.
7. THE CONTRACTOR SHALL PROVIDE ALL TEMPORARY SUPPORTS, BRACING AND OTHER DEVICES AS MAY BE REQUIRED OR AS DIRECTED BY THE ENGINEER TO PROTECT THE SAFETY OF THE ADJACENT STRUCTURES, ROADWAY AND UTILITIES. ALL COSTS SHALL BE INCLUDED IN THE CONTRACT.
8. ALL AREAS DISTURBED AS A RESULT OF THE CONTRACTOR'S STAGING AND CONSTRUCTION OPERATIONS SHALL BE RESTORED EQUAL TO OR BETTER THAN ORIGINAL CONDITION AT THE CONTRACTOR'S EXPENSE.
9. FINE GRADING SHALL INCLUDE CREATING A SMOOTH STABLE UNIFORM SURFACE WITH TOPSOIL TO SUPPORT TURF GROWTH AND TO ALLOW FOR POSITIVE DRAINAGE. ALL AREAS SHALL BE RAKED OR OTHERWISE CLEARED OF STONES AND OTHER MATERIAL LARGER THAN 1" IN ANY DIAMETER. SURFACES MUST SAFELY ACCOMMODATE THE AIRPORTS MOWING EQUIPMENT.
10. THE COST OF MEASURES AND PRACTICES FOR COMPLIANCE WITH POLLUTION, EROSION, AND SILTATION CONTROL SUCH AS AIR POLLUTION PREVENTION, WATER POLLUTION PREVENTION, TEMPORARY SEEDING, TEMPORARY MULCHING, CONSTRUCTION ROAD STABILIZATION, DUST CONTROL, PROTECTING VEGETATION,AND EROSION AND SILTATION CONTROL PRACTICES DUE TO THE CONTRACTOR'S MEANS AND METHODS, SHALL BE INCLUDED IN THE CONTRACT BID.
11. ALL SOIL EROSION AND SEDIMENT CONTROL DEVICES AND MATERIALS SHALL BE IN PLACE PRIOR TO BEGINNING EARTHWORK OPERATIONS AND SHALL BE MAINTAINED UNTIL THE NEW SLOPES ARE STABILIZED WITH SEEDING AND/OR SLOPE PROTECTION.
12. IN THE EVENT THAT PAVEMENT NEEDS TO BE REMOVED, THE CONTRACTOR SHALL SAWCUT EXISTING PAVEMENT PRIOR TO PAVEMENT REMOVAL.
13. ALL UNSUITABLE SPOIL MATERIAL, SUCH AS CONCRETE AND ASPHALT AND EXCAVATED MATERIAL, SHALL BE DISPOSED OF OFF AIRPORT PROPERTY.
14. THE CONTRACTOR SHALL BE ACQUAINTED WITH THE DRAINAGE CHARACTERISTICS OF THE SITE SO THAT WORK WILL PROGRESS EFFICIENTLY WITH FULL KNOWLEDGE OF DRAINAGE PROBLEMS AND WITHOUT IMPEADING STORMWATER FLOW.
15. ALL EXISTING DRAINAGE SYSTEMS, INCLUDING DITCHES AND CULVERTS, WITHIN THE CONTRACT LIMITS SHALL BE CLEANED AND KEPT CLEAN AND FREE FLOWING FOR THE DURATION OF THE CONTRACT. THE COST OF THIS WORK SHALL BE INCLUDED IN THE CONTRACT BID.
16. THE CONTRACTOR SHALL BE REQUIRED TO PROTECT HIS/HER WORKERS AT ALL TIMES IN CONFORMANCE WITH ALL FEDERAL, STATE AND OSHA REGULATIONS.
17. IT IS THE CONTRACTORS OBLIGATION AND RESPONSIBILITY TO USE METHODS AND EQUIPMENT WHICH WILL INSURE THE SATISFACTORY COMPLETION OF THE REQUIRED WORK WITHIN THE CONTRACT TIME ALLOTTED.
18. THE CONTRACTOR'S STAGING AREA SHALL BE COORDINATED WITH THE OWNER PRIOR TO THE START OF WORK.
19. THE ENGINEER SHALL BE NOTIFIED IN WRITING (VIA RFI) OF ANY CONDITIONS THAT VARY FROM THOSE SHOWN ON THE PLANS. THE CONTRACTOR'S WORK SHALL NOT VARY FROM THE PLANS WITHOUT THE EXPRESSED APPROVAL OF THE ENGINEER.

C3 GENERAL NOTES

SCALE: NOT TO SCALE

&	AND	DMH	DRAINAGE MANHOLE	LF	LINEAR FEET	PVC	POLYVINYL CHLORIDE
@	AT	DW	DRY WELL	MAX	MAXIMUM	S	SLOPE
BLDG.	BUILDING	EA	EACH	MC	MECHANICAL CONTRACT(OR)	SA, SAN	SANITARY SEWER
℄	CENTERLINE	EL, ELEV	ELEVATION	MH	MANHOLE	SH	SIGNAL HAND HOLE
CATV	CABLE TELEVISION	EC	ELECTRICAL CONTRACT(OR)	MIN	MINIMUM	SF	SILT FENCE
CB	CATCH BASIN	ELEC	ELECTRICAL	MUTCD	MANUAL ON UNIFORM TRAFFIC CONTROL DEVICES	S.F., SQ. FT.	SQUARE FEET
CHH	COMMUNICATION HAND HOLE	ES	END SECTION	N	NORTH	ST	STORM SEWER
CMH	COMMUNICATION MANHOLE	EX, EXIST	EXISTING	NTS	NOT TO SCALE	STD	STANDARD
CLR	CLEAR	F.F.E.	FINISH FLOOR ELEVATION	O.F.	ON CENTER	T	TELEPHONE
C.O.	CLEAN OUT	FT	FOOT, FEET	OS	OUTLET STRUCTURE	TCF	TEMPORARY CONSTRUCTION FENCE
CONC	CONCRETE	GC	GENERAL CONTRACTOR	ℙ	PROPERTY LINE	TYP	TYPICAL
Ø, DIA	DIAMETER	HDPE	HIGH DENSITY POLYETHYLENE	PC	PLUMBING CONTRACT(OR)	UD	UNDERDRAIN
DH	DEEP HOLE	HH	HAND HOLE	PT	PERCOLATION TEST	V	VENT
		INV	INVERT			W	WATER

NOTE: NOT ALL ABBREVIATIONS ARE USED.

B3 ABBREVIATIONS

SCALE: NOT TO SCALE

EXISTING BUILDING	EXISTING BUILDING
W	EXISTING WATER LINE, VALVE & HYDRANT
ST CB	EXISTING STORM SEWER & CATCH BASIN
SA	EXISTING SANITARY SEWER & MANHOLE
E	EXISTING UNDERGROUND ELECTRIC
OHW	EXISTING OVERHEAD WIRES
G GV	EXISTING NATURAL GAS LINE & VALVE
x x x x	EXISTING SECURITY FENCE & GATES
	EXISTING PROPERTY LINE
625	EXISTING CONTOURS
LP	EXISTING LIGHT POLE
UP	EXISTING UTILITY POLE
BUILDING	PROPOSED BUILDING
	PROPOSED CONCRETE
	EXISTING ASPHALT PAVEMENT OR CONCRETE TO BE REMOVED
W WV PIV	PROPOSED WATER LINE, VALVE & PIV
G GV	PROPOSED GAS SERVICE & VALVE (BY UTILITY)
ST	PROPOSED STORM SEWER
UE	PROPOSED UNDERGROUND ELECTRICAL
629	PROPOSED CONTOUR LINE
630.50'	PROPOSED SPOT ELEVATION
	PROPOSED BOLLARD
	PROPOSED INLET PROTECTION

A3 LEGEND

SCALE: NOT TO SCALE

C&S COMPANIES®
C&S Engineers, Inc.
1600 Market Street,
Suite 3450
Philadelphia, PA 19103
Phone: (215) 709-4340
www.cscos.com

STATE OF NEW JERSEY
RICHARD N. MCLAUGHLIN
No. 24GE05298800
LICENSED PROFESSIONAL ENGINEER
May 8, 2024

DRBA
DELAWARE RIVER & BAY AUTHORITY

WWD HANGAR DESIGN
DELAWARE RIVER AND BAY AUTHORITY
505 FORESTAL ROAD
CAPE MAY, NJ 08242

MARK	DATE	DESCRIPTION

REVISIONS

PROJECT NO:	872.013.088
DATE:	MARCH 2024
DRAWN BY:	M. ZINGARO
DESIGNED BY:	S. MEARON
CHECKED BY:	S.H. SHOVA

CONTRACTOR SHALL VERIFY ALL CONDITIONS ON JOB SITE & NOTIFY THE OWNER OF ANY VARIATIONS FROM DIMENSIONS SHOWN ON THESE DRAWINGS BEFORE PROCEEDING WITH ANY CONSTRUCTION.

GENERAL NOTES, ABBREVIATIONS, AND LEGEND

C-001

Copyright ©

Mar 08, 2024 - 12:36pm
F:\Project\872_DELAWARE RIVER & BAY AUTHORITY\872013088 WWD Hangar Design\Design\CADD\Sheet Files\872013088_C-001.dwg

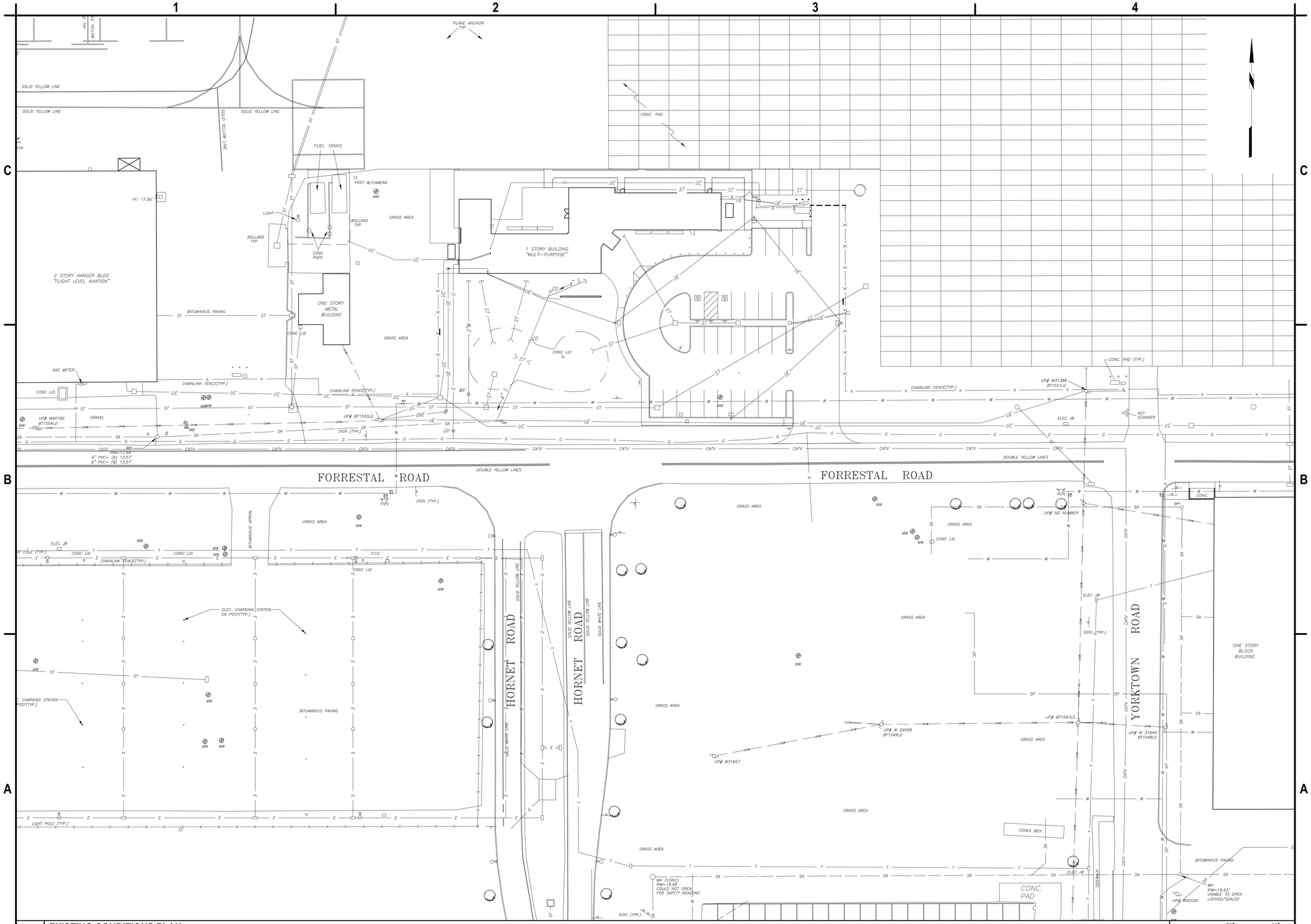

A1 EXISTING CONDITIONS PLAN

SCALE: 1" = 30'-0"

C&S COMPANIES®

C&S Engineers, Inc.
1600 Market Street,
Suite 3450
Philadelphia, PA 19103
Phone: (215) 709-4340
www.cscos.com

STATE OF NEW JERSEY RICHARD N. MCLAUGHLIN No. 24GE05298800 LICENSED PROFESSIONAL ENGINEER

May 8, 2024

DRBA DELAWARE RIVER & BAY AUTHORITY

WWD HANGAR DESIGN DELAWARE RIVER AND BAY AUTHORITY 505 FORESTAL ROAD CAPE MAY, NJ 08242

MARK	DATE	DESCRIPTION

REVISIONS

PROJECT NO:	872.013.088
DATE:	MARCH 2024
DRAWN BY:	M. ZINGARO
DESIGNED BY:	M. CHAMBERS
CHECKED BY:	S.H. SHOVA

CONTRACTOR SHALL VERIFY ALL CONDITIONS ON JOB SITE & NOTIFY THE OWNER OF ANY VARIATIONS FROM DIMENSIONS SHOWN ON THESE DRAWINGS BEFORE PROCEEDING WITH ANY CONSTRUCTION.

EXISTING CONDITIONS PLAN

C-002

Copyright ©

Mar 08, 2024 - 12:36pm
F:\Projects\872 - DELAWARE RIVER & BAY AUTHORITY\872013088 WWD Hangar Design\Design\CADD\Sheet Files\872013088_C-002.dwg

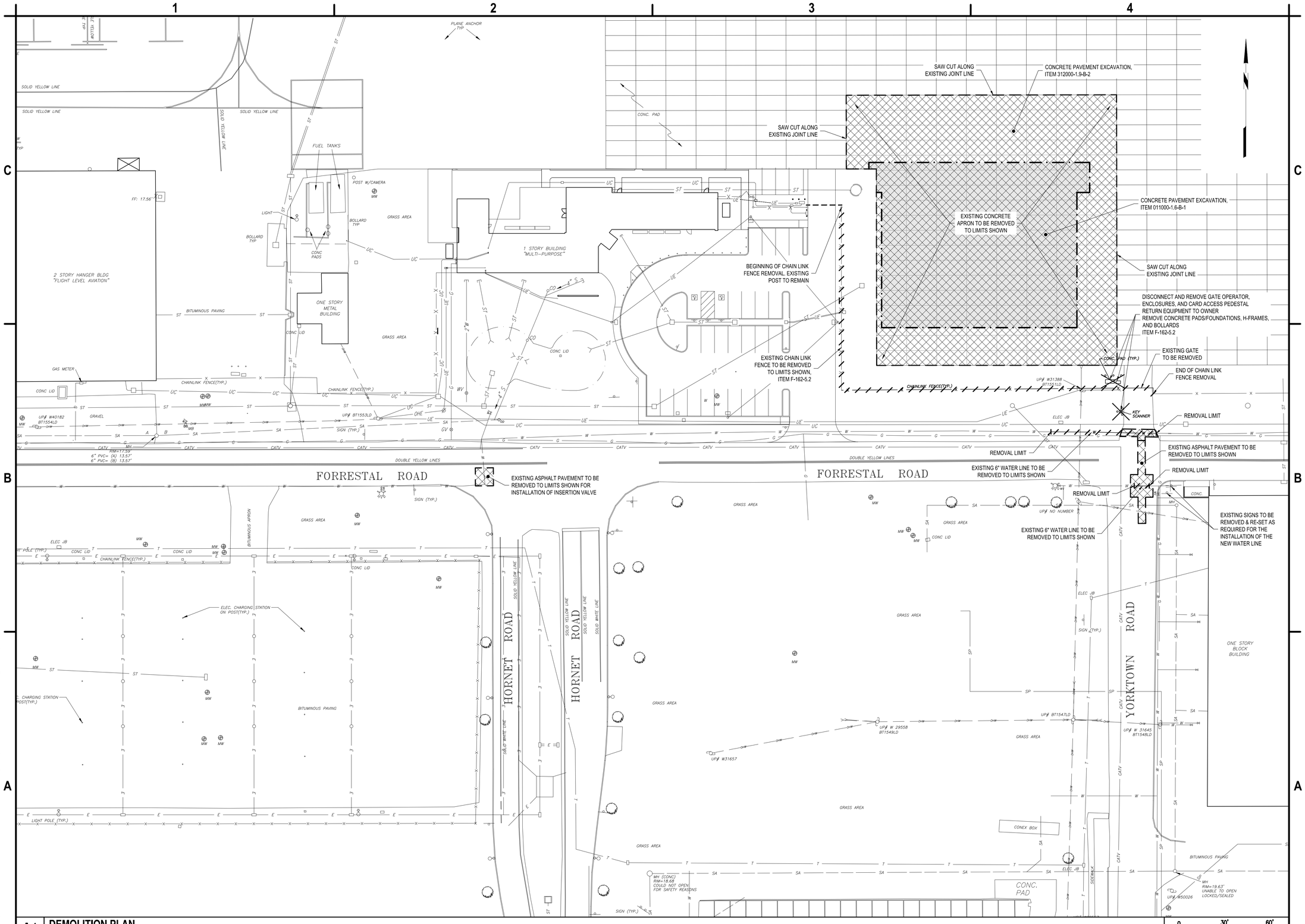

A1 DEMOLITION PLAN

SCALE: 1" = 30'-0"

C&S COMPANIES®

C&S Engineers, Inc.
1600 Market Street,
Suite 3450
Philadelphia, PA 19103
Phone: (215) 709-4340
www.cscos.com

STATE OF NEW JERSEY RICHARD N. MCLAUGHLIN No. 24GE05298800 LICENSED PROFESSIONAL ENGINEER

May 8, 2024

DRBA DELAWARE RIVER & BAY AUTHORITY

WWD HANGAR DESIGN DELAWARE RIVER AND BAY AUTHORITY 505 FORESTAL ROAD CAPE MAY, NJ 08242

MARK	DATE	DESCRIPTION

REVISIONS

PROJECT NO:	872.013.088
DATE:	MARCH 2024
DRAWN BY:	M. ZINGARO
DESIGNED BY:	S. MEARON
CHECKED BY:	S.H. SHOVA

CONTRACTOR SHALL VERIFY ALL CONDITIONS ON JOB SITE & NOTIFY THE OWNER OF ANY VARIATIONS FROM DIMENSIONS SHOWN ON THESE DRAWINGS BEFORE PROCEEDING WITH ANY CONSTRUCTION.

DEMOLITION PLAN

CD-101

Copyright ©

Apr 15, 2024 - 3:08pm
F:\Projects\872 - DELAWARE RIVER & BAY AUTHORITY\872013088 WWD Hangar Design\Design\CADD\Sheet Files\872013088_CD-101.dwg

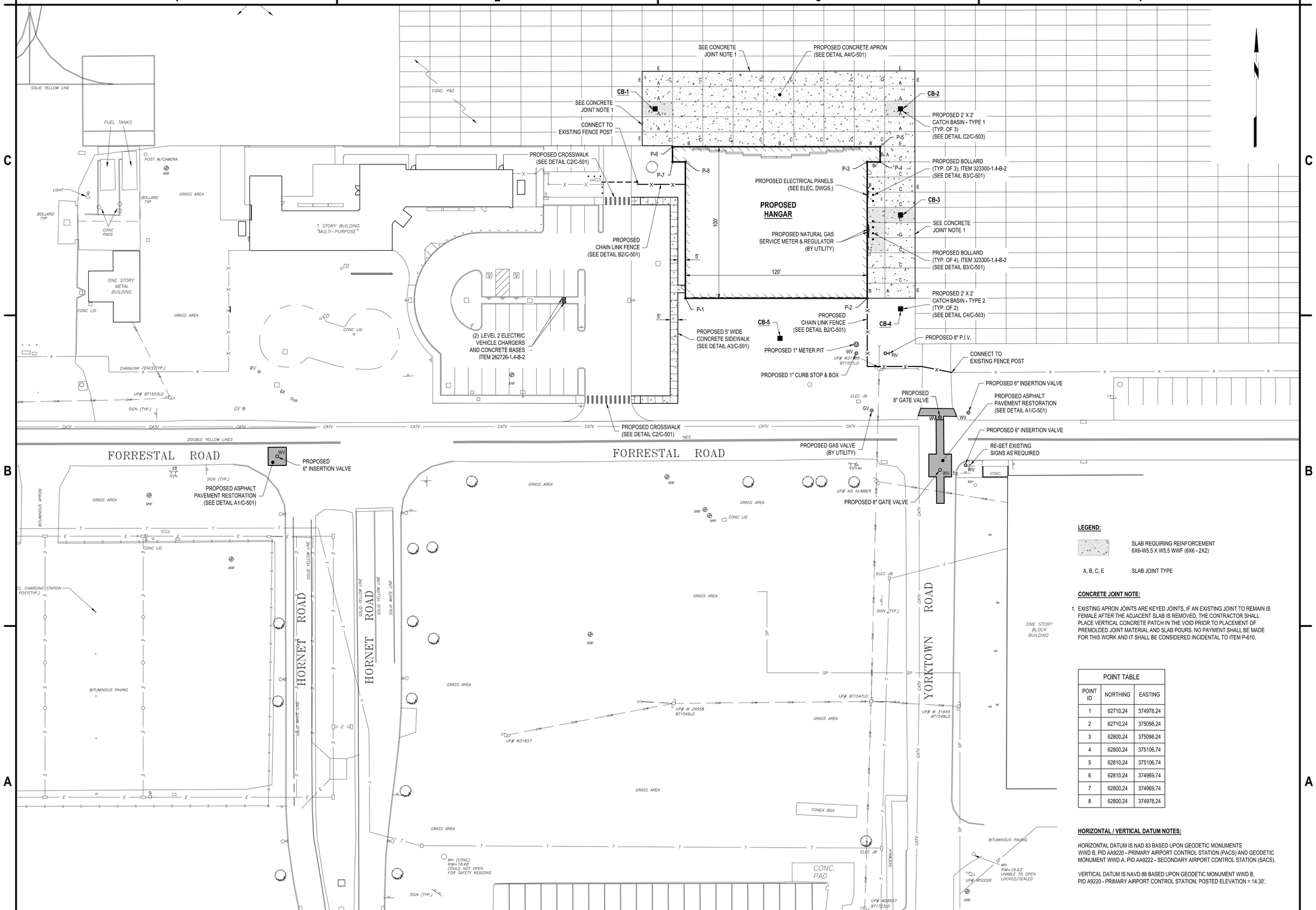

LEGEND:

SLAB REQUIRING REINFORCEMENT 6X6-W5.5 X W5.5 WWF (6X6 - 2X2)

A, B, C, E — SLAB JOINT TYPE

CONCRETE JOINT NOTE:

1. EXISTING APRON JOINTS ARE KEYED JOINTS. IF AN EXISTING JOINT TO REMAIN IS FEMALE AFTER THE ADJACENT SLAB IS REMOVED, THE CONTRACTOR SHALL PLACE VERTICAL CONCRETE PATCH IN THE VOID PRIOR TO PLACEMENT OF PREMOLDED JOINT MATERIAL AND SLAB POURS. NO PAYMENT SHALL BE MADE FOR THIS WORK AND IT SHALL BE CONSIDERED INCIDENTAL TO ITEM P-610.

POINT TABLE

POINT ID	NORTHING	EASTING
1	62710.24	374978.24
2	62710.24	375098.24
3	62800.24	375098.24
4	62800.24	375106.74
5	62810.24	375106.74
6	62810.24	374969.74
7	62800.24	374969.74
8	62800.24	374978.24

HORIZONTAL / VERTICAL DATUM NOTES:

HORIZONTAL DATUM IS NAD 83 BASED UPON GEODETIC MONUMENTS WWD B, PID AA9220 - PRIMARY AIRPORT CONTROL STATION (PACS) AND GEODETIC MONUMENT WWD A, PID AA9222 - SECONDARY AIRPORT CONTROL STATION (SACS).

VERTICAL DATUM IS NAVD 88 BASED UPON GEODETIC MONUMENT WWD B, PID A9220 - PRIMARY AIRPORT CONTROL STATION. POSTED ELEVATION = 14.30'.

A1 SITE PLAN
SCALE: 1" = 30'-0"

0 30' 60'

C&S COMPANIES®
C&S Engineers, Inc.
1600 Market Street,
Suite 3450
Philadelphia, PA 19103
Phone: (215) 709-4340
www.cscos.com

STATE OF NEW JERSEY RICHARD N. MCLAUGHLIN No. 24GE05298800 LICENSED PROFESSIONAL ENGINEER
May 8, 2024

DRBA DELAWARE RIVER & BAY AUTHORITY

WWD HANGAR DESIGN DELAWARE RIVER AND BAY AUTHORITY 505 FORESTAL ROAD CAPE MAY, NJ 08242

MARK	DATE	DESCRIPTION

REVISIONS

PROJECT NO: 872.013.088
DATE: MARCH 2024
DRAWN BY: M. ZINGARO
DESIGNED BY: S. MEARON
CHECKED BY: S.H. SHOVA

CONTRACTOR SHALL VERIFY ALL CONDITIONS ON JOB SITE & NOTIFY THE OWNER OF ANY VARIATIONS FROM DIMENSIONS SHOWN ON THESE DRAWINGS BEFORE PROCEEDING WITH ANY CONSTRUCTION.

SITE PLAN

C-101

Copyright ©

Apr 15, 2024, 3:50pm
P:\Projects\872 - DELAWARE RIVER & BAY AUTHORITY\872013088 WWD Hangar Design\Design\CADD\Sheet Files\872013088_C-101.dwg

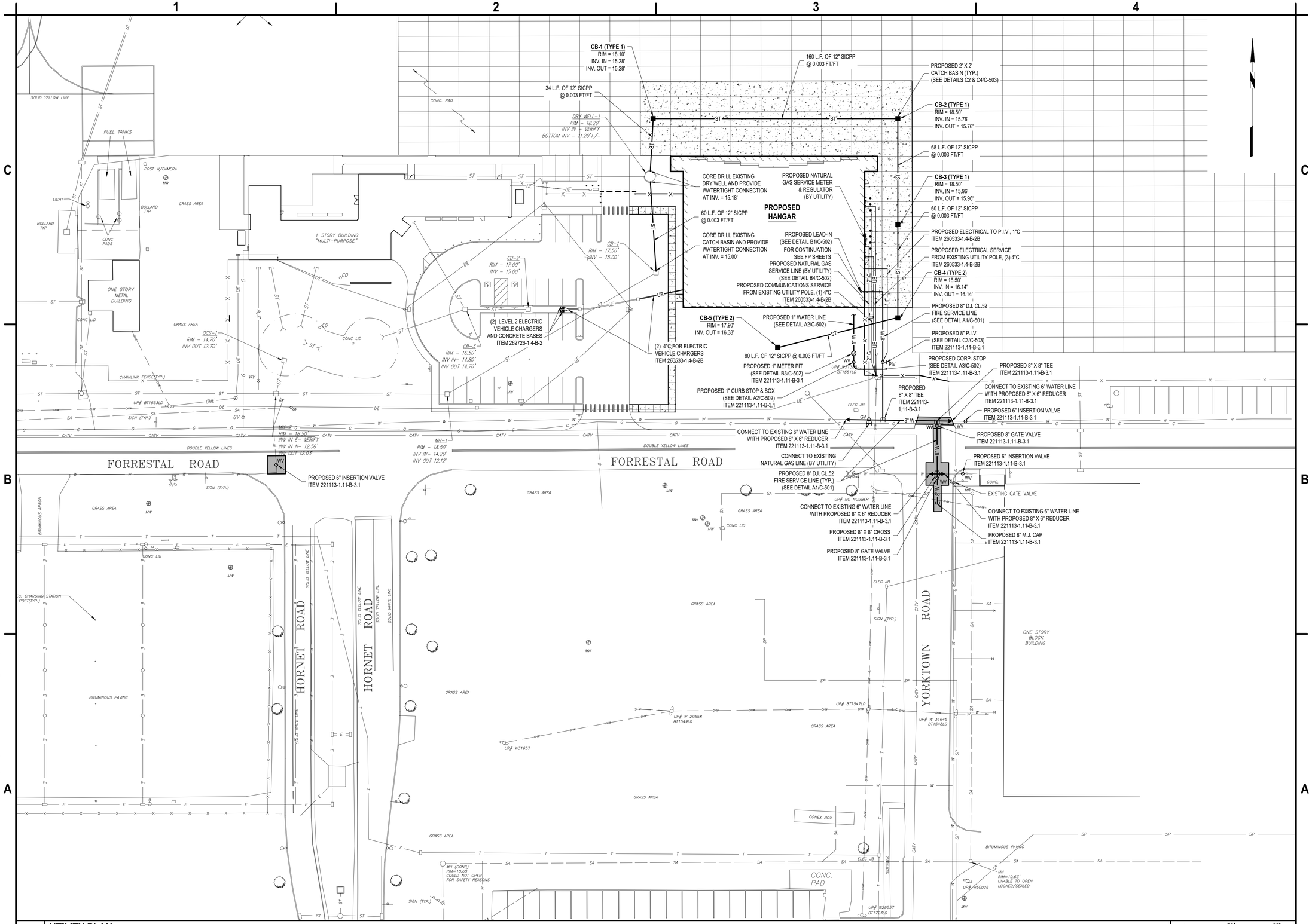

A1 **UTILITY PLAN**
SCALE: 1" = 30'-0"

0 30' 60'

C&S COMPANIES®
C&S Engineers, Inc.
1600 Market Street,
Suite 3450
Philadelphia, PA 19103
Phone: (215) 709-4340
www.cscos.com

STATE OF NEW JERSEY
RICHARD N. MCLAUGHLIN
No. 24GE05298800
LICENSED PROFESSIONAL ENGINEER
May 8, 2024

DRBA
DELAWARE RIVER & BAY AUTHORITY

WWD HANGAR DESIGN
DELAWARE RIVER AND BAY AUTHORITY
505 FORESTAL ROAD
CAPE MAY, NJ 08242

MARK	DATE	DESCRIPTION

REVISIONS

PROJECT NO:	872.013.088
DATE:	MARCH 2024
DRAWN BY:	M. ZINGARO
DESIGNED BY:	S. MEARON
CHECKED BY:	S.H. SHOVA

CONTRACTOR SHALL VERIFY ALL CONDITIONS ON JOB SITE & NOTIFY THE OWNER OF ANY VARIATIONS FROM DIMENSIONS SHOWN ON THESE DRAWINGS BEFORE PROCEEDING WITH ANY CONSTRUCTION.

UTILITY PLAN

C-102

Copyright ©

Apr 15, 2024 - 4:02pm
F:\Project\872 - DELAWARE RIVER & BAY AUTHORITY\872013088 WWD Hangar Design\Design\CADD\Sheet Files\872013088_C-102.dwg

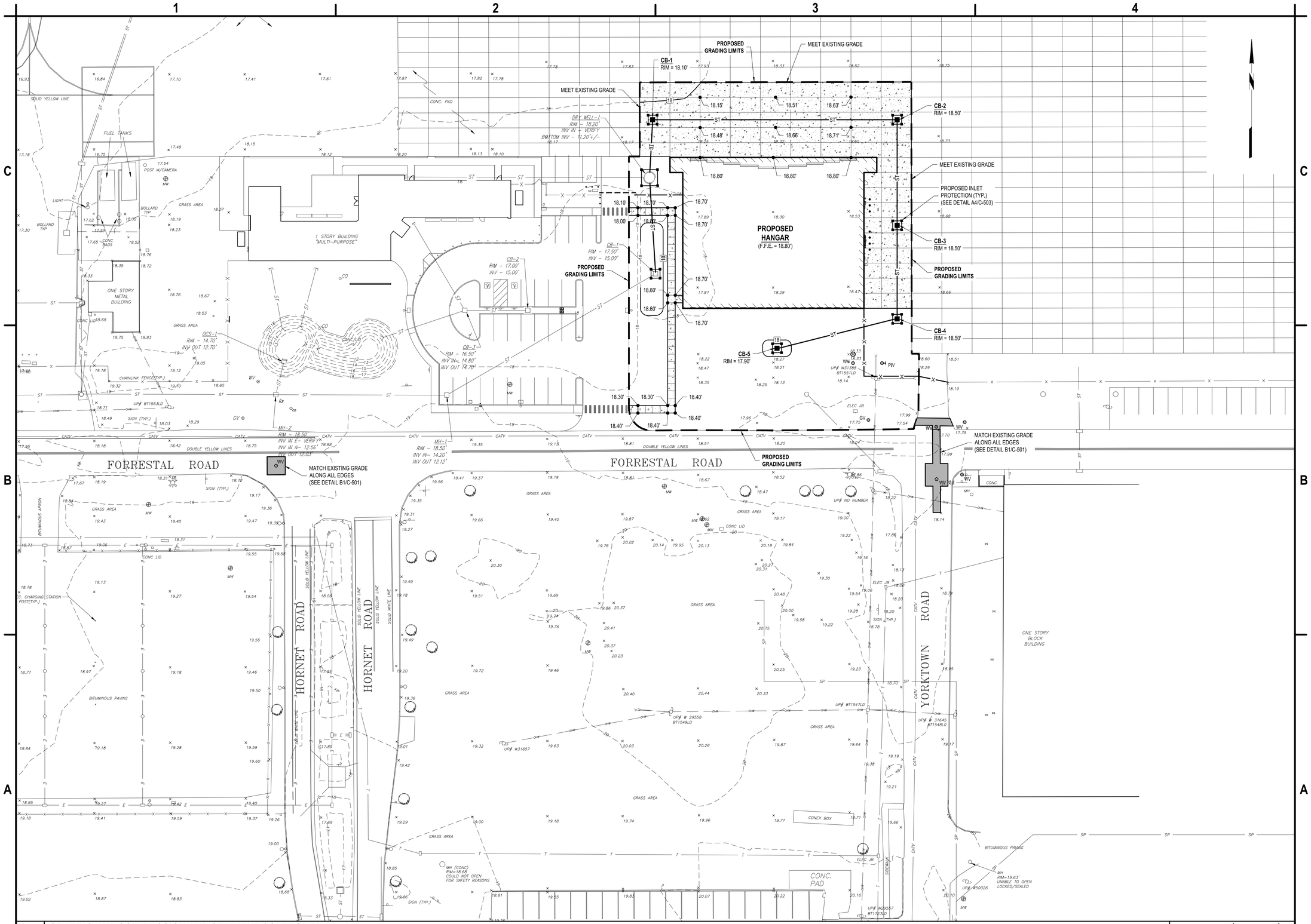

A1 GRADING AND SOIL EROSION AND SEDIMENT CONTROL PLAN

SCALE: 1" = 30'-0"

C&S COMPANIES®

C&S Engineers, Inc.
1600 Market Street,
Suite 3450
Philadelphia, PA 19103
Phone: (215) 709-4340
www.cscos.com

STATE OF NEW JERSEY
RICHARD N. MCLAUGHLIN
No. 24GE05298800
LICENSED PROFESSIONAL ENGINEER

May 8, 2024

DRBA
DELAWARE RIVER & BAY AUTHORITY

WWD HANGAR DESIGN
DELAWARE RIVER AND BAY AUTHORITY
505 FORESTAL ROAD
CAPE MAY, NJ 08242

MARK	DATE	DESCRIPTION

REVISIONS

PROJECT NO:	872.013.088
DATE:	MARCH 2024
DRAWN BY:	M. ZINGARO
DESIGNED BY:	M. CHAMBERS
CHECKED BY:	S.H. SHOVA

CONTRACTOR SHALL VERIFY ALL CONDITIONS ON JOB SITE & NOTIFY THE OWNER OF ANY VARIATIONS FROM DIMENSIONS SHOWN ON THESE DRAWINGS BEFORE PROCEEDING WITH ANY CONSTRUCTION.

GRADING AND SOIL EROSION AND SEDIMENT CONTROL PLAN

C-103

Copyright ©

Apr 15, 2024 - 4:16pm
F:\Project\872 - DELAWARE RIVER & BAY AUTHORITY\872013088 WWD Hangar Design\Design\CADD\Sheet Files\872013088_C-103.dwg

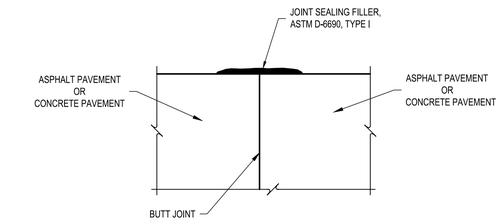

C1 TYPICAL JOINT SEALING DETAIL
SCALE: NOT TO SCALE

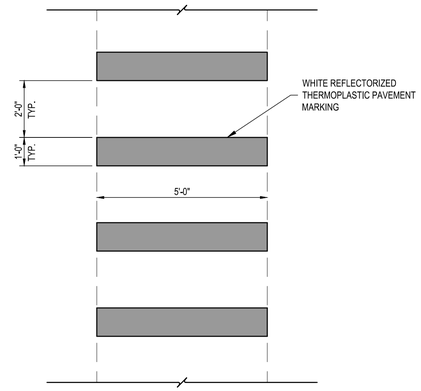

C2 CROSSWALK MARKING DETAIL
SCALE: NOT TO SCALE

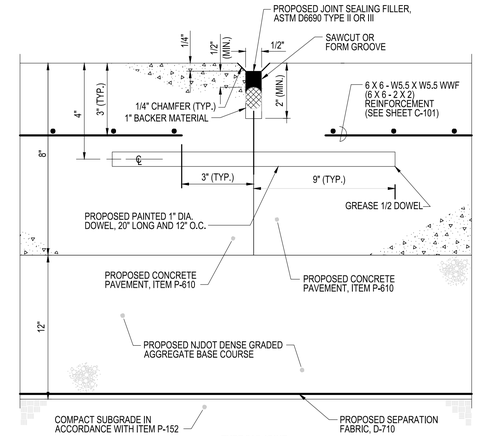

TYPE "A" JOINT

C3 CONSTRUCTION JOINT DETAIL (REINFORCED)
SCALE: NOT TO SCALE

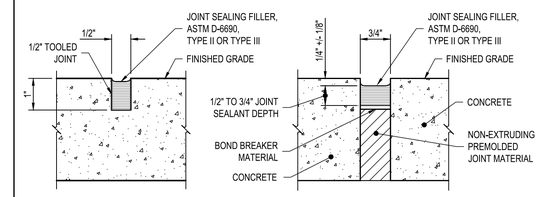

TYPE "C" JOINT - CONTROL JOINT

TYPE "E" JOINT - EXPANSION JOINT / ISOLATI ON JOINT

C4 TYPICAL CONCRETE JOINT DETAILS
SCALE: NOT TO SCALE

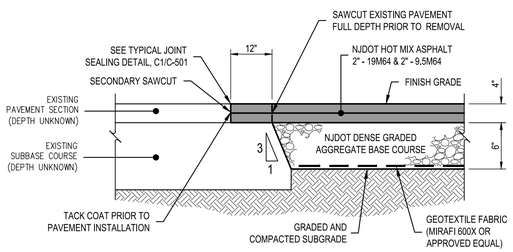

B1 ASPHALT PAVEMENT SECTION & KEYING DETAIL
SCALE: NOT TO SCALE

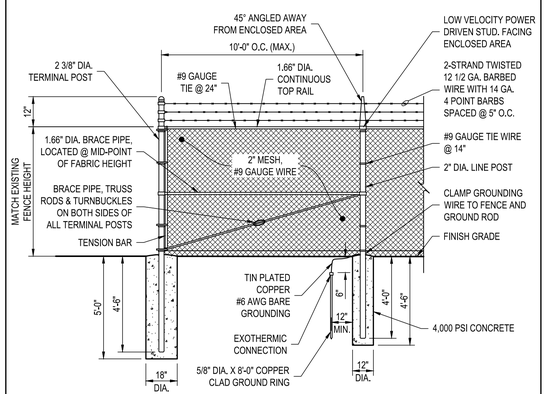

B2 CHAIN LINK PERIMETER FENCE DETAIL
SCALE: NOT TO SCALE

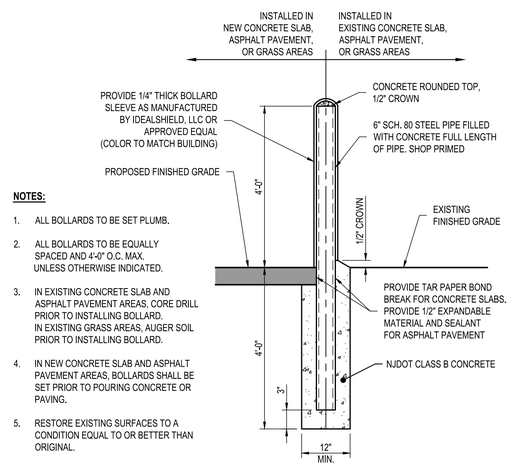

NOTES:

1. ALL BOLLARDS TO BE SET PLUMB.
2. ALL BOLLARDS TO BE EQUALLY SPACED AND 4'-0" O.C. MAX. UNLESS OTHERWISE INDICATED.
3. IN EXISTING CONCRETE SLAB AND ASPHALT PAVEMENT AREAS, CORE DRILL PRIOR TO INSTALLING BOLLARD. IN EXISTING GRASS AREAS, AUGER SOIL PRIOR TO INSTALLING BOLLARD.
4. IN NEW CONCRETE SLAB AND ASPHALT PAVEMENT AREAS, BOLLARDS SHALL BE SET PRIOR TO POURING CONCRETE OR PAVING.
5. RESTORE EXISTING SURFACES TO A CONDITION EQUAL TO OR BETTER THAN ORIGINAL.

B3 TYPICAL STEEL PIPE BOLLARD DETAIL
SCALE: NOT TO SCALE

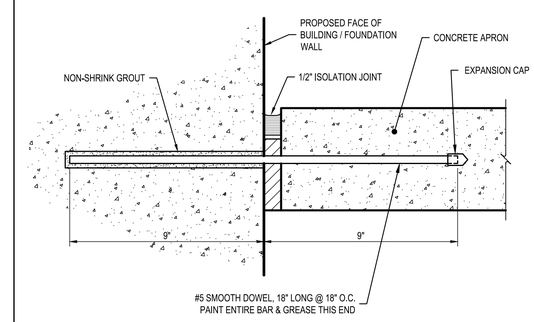

TYPE "B" JOINT

B4 DOWEL DETAIL @ CONCRETE APRON & BUILDING FACE
SCALE: NOT TO SCALE

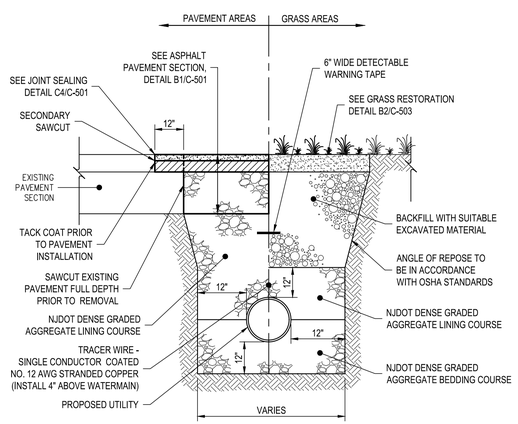

A1 UTILITY TRENCH & RESTORATION DETAIL
SCALE: NOT TO SCALE

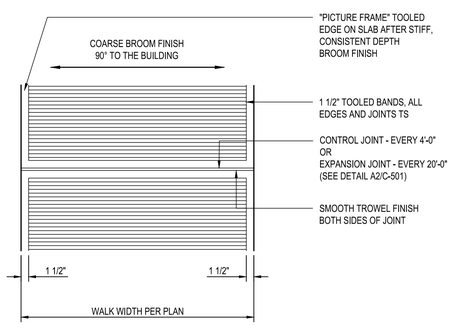

A2 CONCRETE SIDEWALK FINISH DETAIL
SCALE: NOT TO SCALE

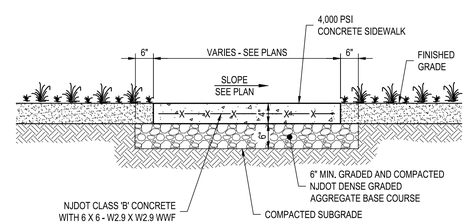

NOTES:

1. PROVIDE 1/2" WIDE ISOLATION JOINT ALONG BUILDING FACE

A3 CONCRETE SIDEWALK DETAIL
SCALE: NOT TO SCALE

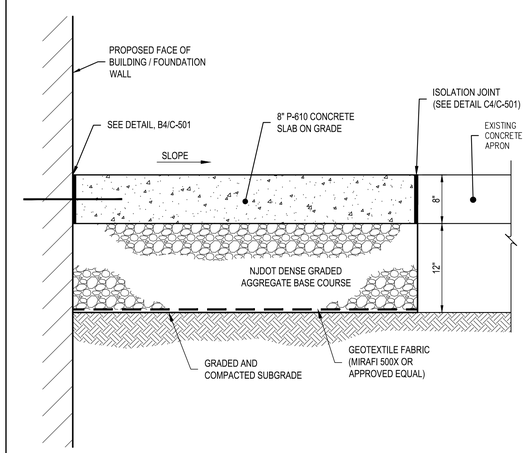

A4 CONCRETE APRON DETAIL
SCALE: NOT TO SCALE

C&S COMPANIES®
C&S Engineers, Inc.
1600 Market Street,
Suite 3450
Philadelphia, PA 19103
Phone: (215) 709-4340
www.cscos.com

STATE OF NEW JERSEY RICHARD N. MCLAUGHLIN No. 24GE05298800 LICENSED PROFESSIONAL ENGINEER
May 8, 2024

DRBA DELAWARE RIVER & BAY AUTHORITY

WWD HANGAR DESIGN
DELAWARE RIVER AND BAY AUTHORITY
505 FORESTAL ROAD
CAPE MAY, NJ 08242

MARK	DATE	DESCRIPTION

REVISIONS

PROJECT NO:	872.013.088
DATE:	MARCH 2024
DRAWN BY:	M. ZINGARO
DESIGNED BY:	S. MEARON
CHECKED BY:	S.H. SHOVA

CONTRACTOR SHALL VERIFY ALL CONDITIONS ON JOB SITE & NOTIFY THE OWNER OF ANY VARIATIONS FROM DIMENSIONS SHOWN ON THESE DRAWINGS BEFORE PROCEEDING WITH ANY CONSTRUCTION.

DETAILS

C-501

Copyright ©

Mar 08, 2024 - 12:37pm
F:\Projects\872 - DELAWARE RIVER & BAY AUTHORITY\872013088 WWD Hangar Design\Design\CADD\Sheet Files\872013088_C-501.dwg

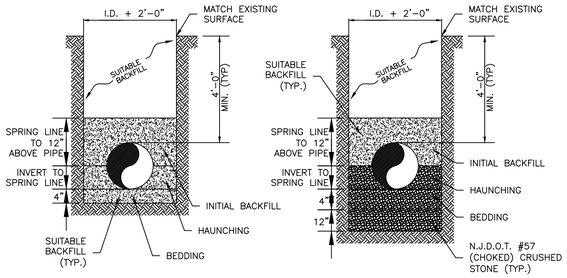

BANK RUN SAND AND GRAVEL
(DRY, SUITABLE BEDDING CONDITIONS)

SCREENED GRAVEL OR STONE
(CLAY, WET OR UNSUITABLE BEDDING CONDITIONS)

NOTES:

1. SUITABLE BACKFILL SHALL CONSIST OF BANK RUN SAND AND GRAVEL OR SUITABLE EXCAVATED MATERIAL FREE FROM ORGANIC OR DELETERIOUS MATERIAL.
2. SUITABLE BACKFILL TO BE THOROUGHLY COMPACTED IN 6" LIFTS BY MECHANICAL TAMPING (OR BY HAND TAMPING WHEN AND WHERE DIRECTED).
3. SUITABLE BACKFILL SHALL BE COMPACTED TO 95% STANDARD PROCTOR DENSITY OR AS DIRECTED IN THE SPECIFICATION.
4. AREAS SURROUNDING PIPE SHALL BE HAND TAMPED TO FILL ALL CAVITIES.
5. EXCAVATION SHALL COMPLY WITH OSHA REQUIREMENTS.
6. THE CONTRACTOR MUST DEWATER PRIOR TO PLACING THE PIPE IF WET TRENCH CONDITIONS ARE FOUND. THE PIPE MUST REMAIN IN DRY CONDITIONS UNTIL BACKFILLED.

C1 TYPICAL PIPE BEDDING / BACKFILL DETAIL

SCALE: NOT TO SCALE

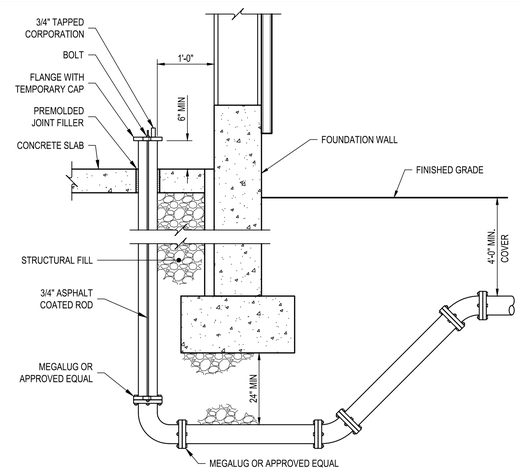

B1 FIRE SERVICE LEAD-IN DETAIL

SCALE: NOT TO SCALE

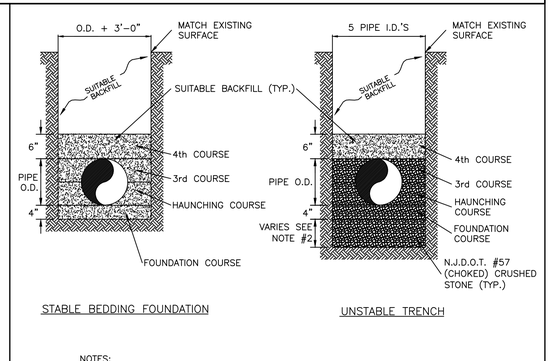

STABLE BEDDING FOUNDATION

UNSTABLE TRENCH

NOTES:

1. THE CONTRACTOR MUST COMPLY WITH ALL APPLICABLE O.S.H.A. STANDARDS.
2. UNSUITABLE MATERIAL, AS DETERMINED BY THE ENGINEER, ENCOUNTERED BENEATH THE TRENCH TO BE REMOVED. REMOVAL DEPTH TO BE DETERMINED BY THE ENGINEER.
3. SUITABLE BACKFILL SHALL CONSIST OF BANK RUN SAND AND GRAVEL OR SUITABLE EXCAVATED MATERIAL FREE FROM ORGANIC OR DELERTEIOUS MATERIAL.

B2 PVC PIPE BEDDING & BACKFILL DETAILS

SCALE: NOT TO SCALE

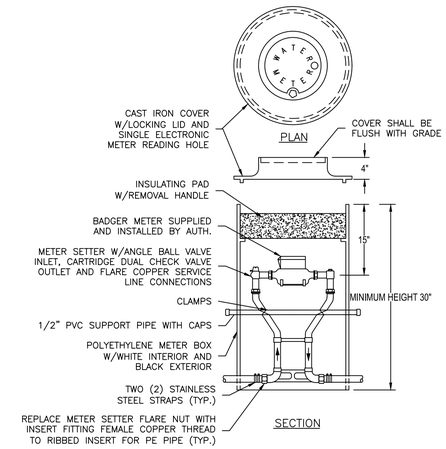

	3/4" SERVICE SIZE	1" SERVICE SIZE
METER PIT	18"ø MID-STATE B SERIES OR APPROVED EQUAL	20"ø MID-STATE B SERIES OR APPROVED EQUAL
INSULATING PAD	FORD CCID-18, MID-STATE OR APPROVED EQUAL	FORD CCID-20, MID-STATE OR APPROVED EQUAL
METER SETTER	FORD VBHC71-18W-22-33 OR APPROVED EQUAL	FORD VBHC74-18W-22-44 OR APPROVED EQUAL
COVER	FORD A32-T OR APPROVED EQUAL	FORD A3-T OR APPROVED EQUAL
INSERT FITTING	FORD PTC-1 OR APPROVED EQUAL	FORD PTC-2 OR APPROVED EQUAL

B3 METER PIT DETAIL FOR 3/4" AND 1" SERVICES

SCALE: NOT TO SCALE

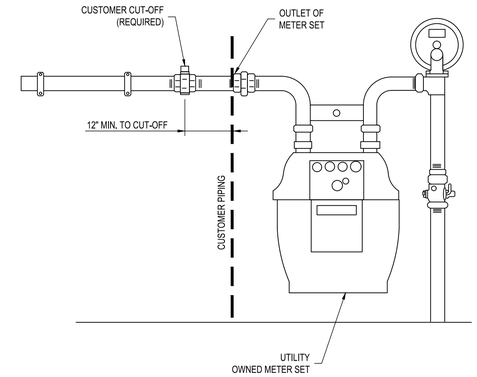

C4 GAS METER ASSEMBLY (BY UTILITY)

SCALE: NOT TO SCALE

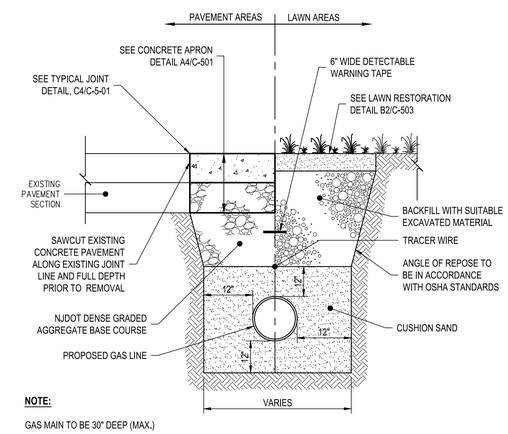

NOTE:

GAS MAIN TO BE 30" DEEP (MAX.)

B4 GAS PIPE TRENCH AND RESTORATION DETAIL (BY UTILITY)

SCALE: NOT TO SCALE

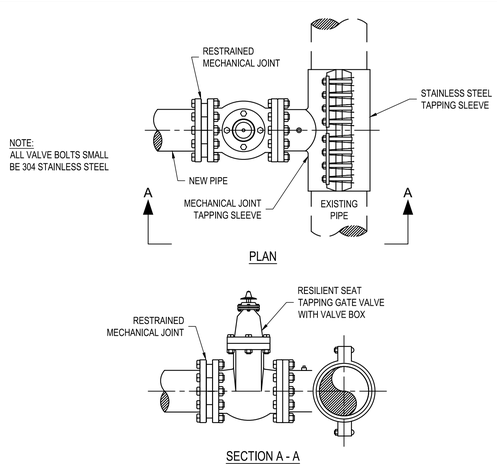

A1 TAPPING SLEEVE AND VALVE (TS&V) DETAIL

SCALE: NOT TO SCALE

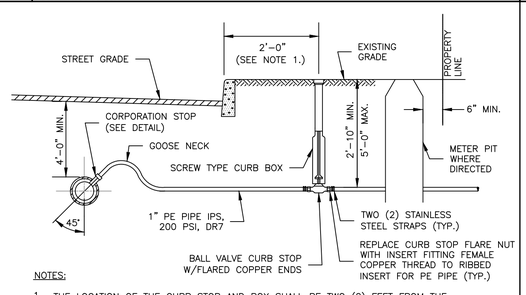

NOTES:

1. THE LOCATION OF THE CURB STOP AND BOX SHALL BE TWO (2) FEET FROM THE CURB IN PLANTED AREAS OR ONE (1) FOOT FROM A PROPOSED SIDEWALK ON THE SIDE NEARER THE RESIDENT.
2. THE CURB STOP/BOX AND METER PIT SHALL NEVER BE PLACED OUTSIDE OF THE STREET R.O.W., IN A CONCRETE SIDEWALK OR IN A DRIVEWAY.
3. THE CONTRACTOR SHALL EXTEND THE SERVICE PIPING TO THE PROPERTY LINE.

CURB STOP	MUELLER B25204, FORD B22-333 OR APPROVED EQUAL
CURB BOX	TYLER SERIES 6500 OR APPROVED EQUAL
INSERT FITTING	FORD PTC SERIES OR APPROVED EQUAL

A2 TYPICAL WATER SERVICE CONNECTION DETAIL

SCALE: NOT TO SCALE

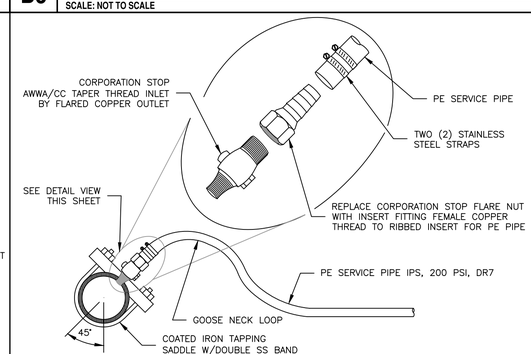

TAPPING SADDLE	MUELLER DR2S, FORD FC202 OR APPROVED EQUAL
CORPORATION STOP 1" AND SMALLER	MUELLER H-15000, FORD F600 OR APPROVED EQUAL
CORPORATION STOP LARGER THEN 1"	MUELLER B-25000, FORD FB600 OR APPROVED EQUAL
INSERT FITTING	FORD PTC SERIES OR APPROVED EQUAL

A3 CORPORATION STOP DETAIL

SCALE: NOT TO SCALE

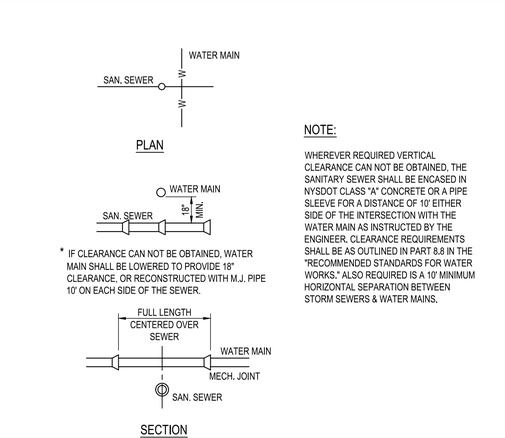

NOTE:

WHEREVER REQUIRED VERTICAL CLEARANCE CAN NOT BE OBTAINED, THE SANITARY SEWER SHALL BE ENCASED IN NYSDOT CLASS "A" CONCRETE OR A PIPE SLEEVE FOR A DISTANCE OF 10' EITHER SIDE OF THE INTERSECTION WITH THE WATER MAIN AS INSTRUCTED BY THE ENGINEER. CLEARANCE REQUIREMENTS SHALL BE AS OUTLINED IN PART 8.8 IN THE "RECOMMENDED STANDARDS FOR WATER WORKS." ALSO REQUIRED IS A 10' MINIMUM HORIZONTAL SEPARATION BETWEEN STORM SEWERS & WATER MAINS.

A4 SEWER MAIN & WATER MAIN SEPARATION DETAIL

SCALE: NOT TO SCALE

C&S COMPANIES®
C&S Engineers, Inc.
1600 Market Street,
Suite 3450
Philadelphia, PA 19103
Phone: (215) 709-4340
www.cscos.com

STATE OF NEW JERSEY RICHARD N. MCLAUGHLIN No. 24GE05298800 LICENSED PROFESSIONAL ENGINEER
May 8, 2024

DRBA DELAWARE RIVER & BAY AUTHORITY

WWD HANGAR DESIGN DELAWARE RIVER AND BAY AUTHORITY 505 FORESTAL ROAD CAPE MAY, NJ 08242

MARK	DATE	DESCRIPTION

REVISIONS

PROJECT NO:	872.013.088
DATE:	MARCH 2024
DRAWN BY:	M. ZINGARO
DESIGNED BY:	S. MEARON
CHECKED BY:	S.H. SHOVA

CONTRACTOR SHALL VERIFY ALL CONDITIONS ON JOB SITE & NOTIFY THE OWNER OF ANY VARIATIONS FROM DIMENSIONS SHOWN ON THESE DRAWINGS BEFORE PROCEEDING WITH ANY CONSTRUCTION.

DETAILS

C-502

Copyright ©

Mar 08, 2024 - 12:37pm
F:\Projects\872 - DELAWARE RIVER & BAY AUTHORITY\872013088 WWD Hangar Design\Design\CADD\Sheet Files\872013088_C-502.dwg

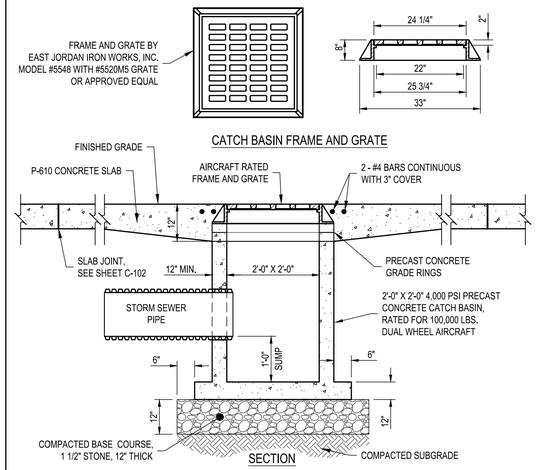

C2 PRECAST CONCRETE 2'X2' CATCH BASIN - TYPE 1

SCALE: NOT TO SCALE

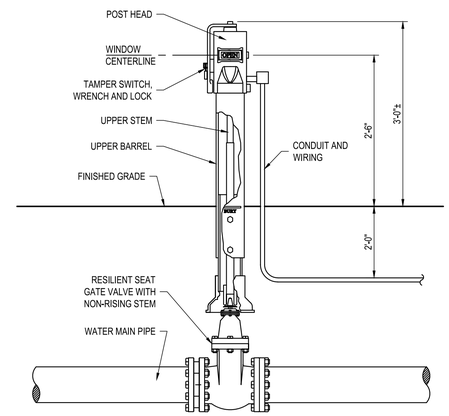

C3 POST INDICATOR VALVE (PIV) DETAIL

SCALE: NOT TO SCALE

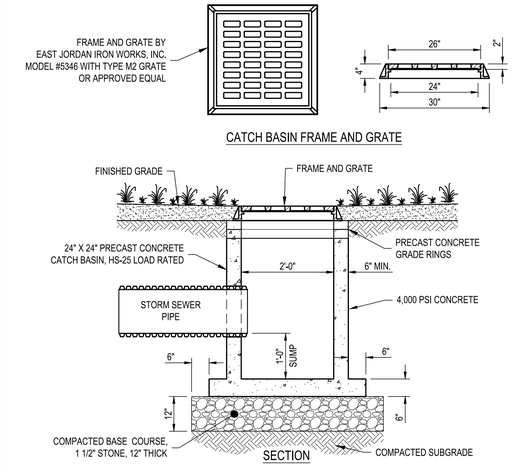

C4 PRECAST CONCRETE 2'X2' CATCH BASIN - TYPE 2

SCALE: NOT TO SCALE

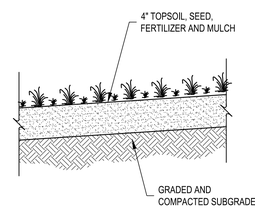

B2 GRASS RESTORATION DETAIL

SCALE: NOT TO SCALE

CONTACT BEARING AREA OF THRUST BLOCKS WITH EARTH IN SQUARE FEET ("A")
150 PSI TEST PRESSURE

DIAMETER OF PIPE (d)	90° ELBOW	45° ELBOW	22 1/2° ELBOW	11 1/4° ELBOW	5 1/8° ELBOW	DEAD END
6"	2.8	1.5	0.8	0.4	0.2	2
8"	4.4	2.4	1.2	0.6	0.3	3.1
10"	6.8	3.7	1.9	0.9	0.4	4.8
12"	9.7	5.3	2.7	1.3	0.6	6.9
16"	16.9	9.2	4.7	2.3	1.1	12.0
18"	21.1	11.4	5.8	2.9	1.3	19.9
20"	25.8	13.9	7.1	3.6	1.6	18.2
24"	36.9	19.9	10.2	5.1	2.3	26.1
30"	56.8	30.8	15.7	7.9	3.6	40.2
36"	81.5	* 44.1	22.5	11.3	5.1	** 57.6

TO DETERMINE THRUST BLOCK BASE AND HEIGHT DIMENSIONS USE THE FOLLOWING FORMULA:
AREA (A) = BASE (B) * HEIGHT (H)

EXAMPLE: IF A=7 SQ. FT. AND B=3.5 FT. THEN H=2 FT.

NOTES:

1. BEARING AREAS ARE BASED ON UNDISTURBED SOIL WITH A BEARING CAPACITY OF 3000 LBS. PER SQ. FT. FOR A LESSER SOIL BEARING CAPACITY, BEARING AREAS SHALL BE INCREASED ACCORDINGLY.
2. ALL CONCRETE THRUST BLOCKS SHALL BE CLASS B CONCRETE.
3. THRUST BLOCKS SHALL BE POURED AGAINST UNDISTURBED EARTH.
4. NO JOINT SHALL BE COVERED WITH CONCRETE.
5. RETAINER GLANDS SHALL BE USED ON ALL MECHANICAL JOINT CONNECTIONS.
6. BEARING AREA CALCULATED: P=Pressure in Lbs/Sq.In. A=Area of the pipe ($A=\pi r^2$)

$$* \text{ Bearing Area in Sq.Ft.} = \frac{2\ PA\ \sin(\text{Angle of Bend}/2)}{\text{Soil Bearing Capacity}} = \frac{(2)\ (150)\ (1152.09)\ (0.3827)}{3{,}000\ \text{Lbs/Sq. Ft.}} = 44.1\ \text{Sq. Ft.}$$

$$** \text{ Bearing Area in Sq.Ft.} = \frac{PA}{\text{Soil Bearing Capacity}} = \frac{(150)\ (1152.00)}{3{,}000\ \text{Lbs/Sq. Ft.}} = 57.6\ \text{Sq. Ft.}$$

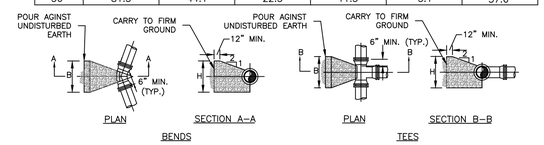

B3 THRUST BLOCKS HORIZONTAL BENDS & VERTICAL UPWARD BENDS DETAIL

SCALE: NOT TO SCALE

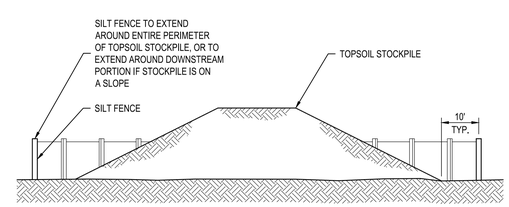

TEMPORARY STOCKPILE NOTES:

1. REFER TO SILT FENCE DETAIL FOR MATERIALS AND INSTALLATION METHODS.
2. IF THE STOCKPILE IS TO REMAIN FOR MORE THAN 14 DAYS, IT SHALL BE STABILIZED WITH BURLAP MATTING OR SEEDED WITHIN 7 DAYS OF COMPLETION TO MINIMIZE EROSION.
3. INSPECTION OF SILT FENCE SHALL BE AT LEAST ONCE PER WEEK AND AFTER RAIN EVENTS IN EXCESS OF 1/2". REPAIR OR REPLACEMENT SHALL BE MADE PROMPTLY AS NEEDED.
4. SEDIMENT TRAPPED BY THE SILT FENCE SHALL BE REMOVED AND PROPERLY DISPOSED OF WHENEVER SIGNIFICANT ACCUMULATION OCCURS.
5. SILT FENCE SHALL BE MAINTAINED IN PLACE UNTIL TOPSOIL STOCKPILE HAS BEEN ELIMINATED AND SHALL BE REMOVED ONLY WHEN DIRECTED BY THE ENGINEER.
6. TOPSOIL STOCKPILE LOCATION SHALL BE DETERMINED BY THE CONTRACTOR AND APPROVED BY THE OWNER OR AN AUTHORIZED REPRESENTATIVE

A3 TEMPORARY STOCKPILE DETAIL

SCALE: NOT TO SCALE

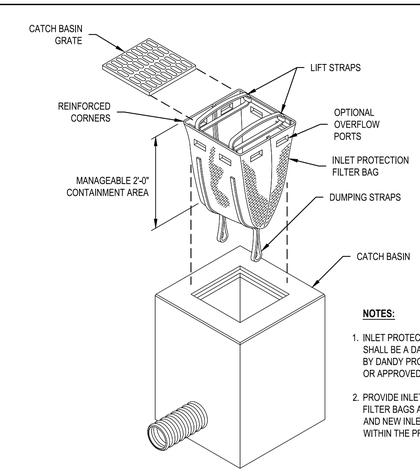

NOTES:

1. INLET PROTECTION FILTER BAG SHALL BE A DANDY SACK BY DANDY PRODUCTS, INC. OR APPROVED EQUAL.
2. PROVIDE INLET PROTECTION FILTER BAGS AT ALL EXISTING AND NEW INLET STRUCTURES WITHIN THE PROJECT AREA.

A4 INLET PROTECTION FILTER BAG DETAIL

SCALE: NOT TO SCALE

C&S COMPANIES®
C&S Engineers, Inc.
1600 Market Street,
Suite 3450
Philadelphia, PA 19103
Phone: (215) 709-4340
www.cscos.com

STATE OF NEW JERSEY
RICHARD N. MCLAUGHLIN
No. 24GE05298800
LICENSED PROFESSIONAL ENGINEER
May 8, 2024

DRBA
DELAWARE RIVER & BAY AUTHORITY

WWD HANGAR DESIGN
DELAWARE RIVER AND BAY AUTHORITY
505 FORESTAL ROAD
CAPE MAY, NJ 08242

MARK	DATE	DESCRIPTION

REVISIONS

PROJECT NO:	872.013.088
DATE:	MARCH 2024
DRAWN BY:	M. ZINGARO
DESIGNED BY:	S. MEARON
CHECKED BY:	S.H. SHOVA

CONTRACTOR SHALL VERIFY ALL CONDITIONS ON JOB SITE & NOTIFY THE OWNER OF ANY VARIATIONS FROM DIMENSIONS SHOWN ON THESE DRAWINGS BEFORE PROCEEDING WITH ANY CONSTRUCTION.

DETAILS

C-503

Copyright ©

Mar 08, 2024 - 12:37pm
F:\Projects\872 - DELAWARE RIVER & BAY AUTHORITY\872013088 WWD Hangar Design\Design\CADD\Sheet Files\872013088_C-503.dwg

SOIL EROSION AND SEDIMENT CONTROL PLAN

STATEMENTS:

1. ALL APPLICABLE EROSION AND SEDIMENT CONTROL PRACTICES SHALL BE IN PLACE PRIOR TO ANY GRADING OPERATION AND/OR INSTALLATION OF PROPOSED STRUCTURES OR UTILITIES.

2. SOIL EROSION AND SEDIMENT CONTROL PRACTICES ON THE PLAN SHALL BE CONSTRUCTED IN ACCORDANCE WITH THE STANDARDS FOR SOIL EROSION AND SEDIMENT CONTROL IN NEW JERSEY.

3. ALL APPLICABLE EROSION AND SEDIMENT CONTROL PRACTICES SHALL BE LEFT IN PLACE UNTIL CONSTRUCTION IS COMPLETED AND/OR THE AREA IS STABILIZED.

4. ANY DISTURBED AREA THAT WILL BE LEFT EXPOSED FOR MORE THAN SIXTY (60) DAYS AND NOT SUBJECT TO CONSTRUCTION TRAFFIC SHALL IMMEDIATELY RECEIVE A TEMPORARY SEEDING AND FERTILIZATION IN ACCORDANCE WITH THE NEW JERSEY STANDARDS AND APPLICATION RATES SHALL BE INCLUDED IN THE NARRATIVE. IF THE SEASON PROHIBITS TEMPORARY SEEDING, THE DISTURBED AREAS WILL BE MULCHED WITH SALT HAY OR EQUIVALENT AND ANCHORED IN ACCORDANCE WITH THE NEW JERSEY STANDARDS (I.E. PEG AND TWINE, MULCH MATTING OR LIQUID BINDER).

5. ALL CRITICAL AREAS SUBJECT TO EROSION WILL RECEIVE A TEMPORARY SEEDING IN COMBINATION WITH STRAW MULCH AT A RATE OF 2 TONS PER ACRE, ACCORDING TO THE NEW JERSEY STANDARDS IMMEDIATELY FOLLOWING ROUGH GRADING.

6. THE SITE SHALL AT ALL TIMES BE GRADED AND MAINTAINED SUCH THAT ALL STORMWATER RUNOFF IS DIVERTED TO SOIL EROSION AND SEDIMENT CONTROL FACILITIES.

7. ALL SOIL EROSION AND SEDIMENTATION STRUCTURES WILL BE INSPECTED AND MAINTAINED ON A REGULAR BASIS AND AFTER EVERY STORM EVENT.

8. SOIL STOCKPILES ARE NOT TO BE LOCATED WITHIN FIFTY (50) FEET OF A FLOODPLAIN, SLOPE, ROADWAY OR DRAINAGE FACILITY. THE BASE OF ALL STOCKPILES SHOULD BE PROTECTED BY A HAY BALE BARRIER SEDIMENT FENCE. PROPOSED LOCATIONS ARE DELINEATED ON THE PLAN.

9. A CRUSHED STONE, TIRE CLEANING PAD WILL BE INSTALLED WHEREVER A CONSTRUCTION ENTRANCE EXISTS. THE RIP-RAP PAD MUST BE 100 FEET IN LENGTH AND THE STONE MUST BE 1.5 - 4" IN SIZE, PLACED 12" THICK AND THE FULL WIDTH OF THE ENTRANCE. IT SHOULD BE UNDERLAIN WITH A SUITABLE SYNTHETIC FILTER FABRIC AND MAINTAINED.

10. IF A STONE CONSTRUCTION ENTRANCE IS TO BE USED AS AN EXIT ONTO A MAJOR HIGHWAY, A THIRTY (30) FOOT PAVED TRANSITION AREA SHALL BE INSTALLED.

11. ALL DRIVEWAYS MUST BE STABILIZED WITH 2 1/2" CRUSHED STONE OR SUBBASE PRIOR TO INDIVIDUAL LOT CONSTRUCTION.

12. PAVED ROADWAYS MUST BE KEPT CLEAN AT ALL TIMES.

13. ALL CATCH BASIN INLETS WITHIN THE PROJECT AREA WILL BE PROTECTED DURING CONSTRUCTION.

14. ALL STONE DRAINAGE OUTLETS WILL BE STABILIZED, AS REQUIRED, BEFORE THE DISCHARGE POINTS BECOME OPERATIONAL.

15. ALL DEWATERTING MUST DISCHARGE DIRECTLY INTO A SEDIMENT FILTRATION DEVICE. THE SEDIMENT FILTER MUST BE CAPABLE OF FILTERING THE SEDIMENT AND BE PLACED SO AS NOT TO CAUSE EROSION OF THE DOWNSTREAM AREA. DETAILS AND MAINTENANCE OF THE DEVICE MUST BE INCLUDED ON THE PLANS. FIELD PLACEMENT AND USE OF THE STRUCTURE MUST BE APPROVED BY THE DISTRICT EROSION CONTROL INSPECTOR PRIOR TO COMMENCEMENT OF DEWATERING ACTIVITIES.

16. THE CAPE ATLANTIC SOIL CONSERVATION DISTRICT SHALL BE NOTIFIED, IN WRITING, 72 HOURS PRIOR TO ANY LAND DISTURBANCE.

17. SOIL HAVING A PH OF 4.0 OR LESS OR CONTAINING IRON SULPHIDE MUST BE COVERED WITH A MINIMUM OF 12 INCHES OF SOIL HAVING A PH OF 5.0 OR MORE BEFORE SEEDBED PREPARATION.

18. IT SHALL BE THE RESPONSIBILITY OF THE CONTRACTOR TO PROVIDE THE OWNER WITH CONFIRMATION OF LIME, FERTILIZER AND SEED APPLICATION RATES SO THAT THE OWNER CAN PROVIDE THESE CONFIRMATIONS AT THE REQUEST OF THE CAPE ATLANTIC SOIL CONSERVATION.

19. NJSA 4:24-39, ET SEQ., REQUIRES THAT NO CERTIFICATE OF OCCUPANCY BEFORE ALL THE PROVISIONS OF THE CERTIFIED SOIL EROSION AND SEDIMENT CONTROL PLAN HAVE BEEN

COMPLIED WITH FOR PERMANENT MEASURES. ALL SITE WORK FOR THE PROJECT MUST BE COMPLETED PRIOR TO THE DISTRICT ISSUING A REPORT OF COMPLIANCE AS A PREREQUISITE TO THE ISSUANCE OF A CERTIFICATE OF OCCUPANCY BY THE MUNICIPALITY.

20. NJSA 4:24-39, ET SEQ., REQUIRES THAT UPON PERMANENT SITE STABILIZATION AND COMPLETION OF CONSTRUCTION THE CONTRACTOR SHALL APPLY TO THE SOIL CONSERVATION DISTRICT FOR A FINAL COMPLIANCE INSPECTION TO CHECK THAT ALL THE PROVISIONS OF THE CERTIFIED SOIL EROSION AND SEDIMENT CONTROL PLAN HAVE BEEN COMPLIED WITH FOR PERMANENT MEASURES.

21. OFFSITE SEDIMENT DISTURBANCE MAY REQUIRE ADDITIONAL CONTROL MEASURES TO BE DETERMINED BY THE EROSION CONTROL INSPECTOR.

22. A COPY OF THE CERTIFIED SOIL EROSION AND SEDIMENT CONTROL PLAN MUST BE MAINTAINED ON THE PROJECT SITE DURING CONSTRUCTION.

23. ANY CONVEYANCE OF THIS PROJECT PRIOR TO ITS COMPLETION WILL TRANSFER FULL RESPONSIBILITY FOR COMPLIANCE WITH THE CERTIFIED PLAN TO ALL SUBSEQUENT OWNERS.

24. IMMEDIATELY AFTER THE COMPLETION OF STRIPPING AND STOCKPILING OF TOPSOIL, SEED THE STOCKPILE WITH ANNUAL RYE GRASS. STABILIZE TOPSOIL STOCKPILES WITH STRAW MULCH FOR PROTECTION IF THE SEASON DOES NOT PERMIT THE APPLICATION AND ESTABLISHMENT OF TEMPORARY SEEDING.

25. ANY CHANGES TO THE SITE PLAN WILL REQUIRE THE SUBMISSION OF A REVISED SOIL EROSION AND SEDIMENT CONTROL PLAN TO THE CAPE ATLANTIC SOIL CONSERVATION DISTRICT. THE REVISED PLAN MUST BE IN ACCORDANCE WITH THE CURRENT NEW JERSEY STANDARDS FOR SOIL EROSION AND SEDIMENT CONTROL.

26. MAXIMUM SIDE SLOPES OF ALL EXPOSED SURFACES SHALL NOT BE CONSTRUCTED STEEPER THAN 3:1 UNLESS OTHERWISE APPROVED BY THE DISTRICT.

27. THE SOIL EROSION INSPECTOR MAY REQUIRE ADDITIONAL SOIL EROSION MEASURES TO BE INSTALLED, AS DIRECTED BY THE DISTRICT INSPECTOR.

GENERAL SOIL EROSION NOTES:

1. **SEE DRAINAGE DETAILS AND CONTRACT SPECIFICATIONS FOR ALL MATERIALS AND INSTALLATION PROCEDURES.**
2. **ALL SOIL EROSION AND SEDIMENT CONTROL DEVICES AND MATERIALS SHALL BE IN PLACE PRIOR TO BEGINNING EARTHWORK OPERATIONS AND SHALL BE MAINTAINED UNTIL THE NEW SLOPES ARE STABILIZED WITH SEEDING AND/OR SLOPE PROTECTION, AS DIRECTED BY THE ENGINEER.**
3. **TO PREVENT BLOWING AND MOVEMENT OF DUST FROM EXPOSED SOIL SURFACES, ALL SUCH SURFACES SHALL HAVE WATER SPRINKLED ONTO THE SURFACE UNTIL THE SURFACE IS WET.**

DEFINITION
TOPSOILING ENTAILS THE DISTRIBUTION OF SUITABLE QUALITY SOIL ON AREAS TO BE VEGETATED.

PURPOSE
TO IMPROVE THE SOIL MEDIUM FOR PLANT ESTABLISHMENT AND MAINTENANCE.

WATER QUALITY ENHANCEMENT
GROWTH AND ESTABLISHMENT OF A VIGOROUS VEGETATIVE COVER IS FACILITATED BY TOPSOIL, PREVENTING SOIL LOSS BY WIND AND RAIN OFFSITE AND INTO STREAMS AND OTHER STORMWATER CONVEYANCES.

WHERE APPLICABLE
TOPSOIL SHALL BE USED WHERE SOILS ARE TO BE DISTURBED AND WILL BE REVEGETATED.

METHODS AND MATERIALS
1. MATERIALS

A. TOPSOIL SHOULD BE FRIABLE (1), LOAMY (2), FREE OF DEBRIS, OBJECTIONABLE WEEDS AND STONES, AND CONTAIN NO TOXIC SUBSTANCE OR ADVERSE CHEMICAL OR PHYSICAL CONDITION THAT MAY BE HARMFUL TO PLANT GROWTH. SOLUBLE SALTS SHOULD NOT BE EXCESSIVE (CONDUCTIVITY LESS THAN 0.5 MILLIMHOS PER CENTIMETER. MORE THAN 0.5 MILLIMHOS MAY DESICCATE SEEDLINGS AND ADVERSELY IMPACT GROWTH). IMPORTED TOPSOIL SHALL HAVE A MINIMUM ORGANIC MATTER CONTENT OF 2.75 PERCENT. ORGANIC MATTER CONTENT MAY BE RAISED BY ADDITIVES.

(1) FRIABLE MEANS EASILY CRUMBLES IN THE FINGERS, AS DEFINED IN MOST SOILS TEXTS.
(2) LOAMY MEANS TEXTURE GROUPS CONSISTING OF COARSE LOAMY SANDS, SANDY LOAM, FINE AND VERY FINE SANDY LOAM, LOAM, SILT LOAM, CLAY LOAM, SANDY CLAY LOAM AND SILTY CLAY LOAM TEXTURES AND HAVING LESS THAN 35% COARSE FRAGMENTS (PARTICLES LESS THAN 2MM IN SIZE) AS DEFINED IN THE GLOSSARY OF SOIL SCIENCE TERMS, 1996, SOIL SCIENCE SOCIETY OF AMERICA.

B. TOPSOIL SUBSTITUTE IS A SOIL MATERIAL WHICH MAY HAVE BEEN AMENDED WITH SAND, SILT, CLAY, ORGANIC MATTER, FERTILIZER OR LIME AND HAS THE APPEARANCE OF TOPSOIL. TOPSOIL SUBSTITUTES MAY BE UTILIZED ON SITES WITH INSUFFICIENT TOPSOIL FOR ESTABLISHING PERMANENT VEGETATION. ALL TOPSOIL SUBSTITUTE MATERIALS SHALL MEET THE REQUIREMENTS OF TOPSOIL NOTED ABOVE. SOIL TESTS SHALL BE PERFORMED TO DETERMINE THE COMPONENTS OF SAND, SILT, CLAY, ORGANIC MATTER, SOLUBLE SALTS AND PH LEVEL.

2. STRIPPING AND STOCKPILING

A. FIELD EXPLORATION SHOULD BE MADE TO DETERMINE WHETHER QUANTITY AND OR QUALITY OF SURFACE SOIL JUSTIFIES STRIPPING.

B. STRIPPING SHALL BE CONFINED TO THE IMMEDIATE CONSTRUCTION AREA.

C. WHERE FEASIBLE, LIME MAY BE APPLIED BEFORE STRIPPING AT A RATE DETERMINED BY SOIL TESTS TO BRING THE SOIL PH TO APPROXIMATELY 6.5.

D. A 4-6 INCH STRIPPING DEPTH IS COMMON, BUT MAY VARY DEPENDING ON THE PARTICULAR SOIL.

E. STOCKPILES OF TOPSOIL SHOULD BE SITUATED SO AS NOT TO OBSTRUCT NATURAL DRAINAGE OR CAUSE OFF-SITE ENVIRONMENTAL DAMAGE.

F. STOCKPILES SHOULD BE VEGETATED IN ACCORDANCE WITH STANDARDS PREVIOUSLY DESCRIBED HEREIN; SEE STANDARDS FOR PERMANENT (PG. 4-1) OR TEMPORARY (PG.7-1) VEGETATIVE COVER FOR SOIL STABILIZATION. WEEDS SHOULD NOT BE ALLOWED TO GROW ON STOCKPILES.

3. SITE PREPARATION

A. GRADE AT THE ONSET OF THE OPTIMAL SEEDING PERIOD SO AS TO MINIMIZE THE DURATION AND AREA OF EXPOSURE OF DISTURBED SOIL TO EROSION. IMMEDIATELY PROCEED TO ESTABLISH VEGETATIVE COVER IN ACCORDANCE WITH THE SPECIFIED SEED MIXTURE. TIME IS OF THE ESSENCE

B. GRADE AS NEEDED AND FEASIBLE TO PERMIT THE USE OF CONVENTIONAL EQUIPMENT FOR SEEDBED PREPARATION, SEEDING, MULCH APPLICATION AND ANCHORING, AND MAINTENANCE. SEE THE STANDARD FOR LAND GRADING, PG. 19-1.

C. AS GUIDANCE FOR IDEAL CONDITIONS, SUBSOIL SHOULD BE TESTED FOR LIME REQUIREMENT. LIMESTONE, IF NEEDED, SHOULD BE APPLIED TO BRING SOIL TO A PH OF APPROXIMATELY 6.5 AND INCORPORATED INTO THE SOIL AS NEARLY AS PRACTICAL TO A DEPTH OF 4 INCHES.

D. PRIOR TO TOPSOILING, THE SUBSOIL SHALL BE IN COMPLIANCE WITH THE STANDARD FOR LAND GRADING, PG. 19-1.

E. EMPLOY NEEDED EROSION CONTROL PRACTICES SUCH AS DIVERSIONS, GRADE STABILIZATION STRUCTURES, CHANNEL STABILIZATION MEASURES, SEDIMENTATION BASINS, AND WATERWAYS. SEE STANDARDS 11 THROUGH 42.

4. APPLYING TOPSOIL

A. TOPSOIL SHOULD BE HANDLED ONLY WHEN IT IS DRY ENOUGH TO WORK WITHOUT DAMAGING SOIL STRUCTURE; I.E., LESS THAN FIELD CAPACITY (SEE GLOSSARY).

B. A UNIFORM APPLICATION TO AN AVERAGE DEPTH OF 5.0 INCHES, MINIMUM OF 4 INCHES, FIRMED IN PLACE IS REQUIRED. ALTERNATIVE DEPTHS MAY BE CONSIDERED WHERE SPECIAL REGULATORY AND/OR INDUSTRY DESIGN STANDARDS ARE APPROPRIATE SUCH AS ON GOLF COURSES, SPORTS FIELDS, LANDFILL CAPPING, ETC.. SOILS WITH A PH OF 4.0 OR LESS OR CONTAINING IRON SULFIDE SHALL BE COVERED WITH A MINIMUM DEPTH OF 12 INCHES OF SOIL HAVING A PH OF 5.0 OR MORE, IN ACCORDANCE WITH THE STANDARD FOR MANAGEMENT OF HIGH ACID PRODUCING SOIL (PG. 1-1).

C. PURSUANT TO THE REQUIREMENTS IN SECTION 7 OF THE STANDARD FOR PERMANENT VEGETATIVE STABILIZATION, THE CONTRACTOR IS RESPONSIBLE TO ENSURE THAT PERMANENT VEGETATIVE COVER BECOMES ESTABLISHED ON AT LEAST 80% OF THE SOILS TO BE STABILIZED WITH VEGETATION. FAILURE TO ACHIEVE THE MINIMUM COVERAGE MAY REQUIRE ADDITIONAL WORK TO BE PERFORMED BY THE CONTRACTOR TO INCLUDE SOME OR ALL OF THE FOLLOWING: SUPPLEMENTAL SEEDING, RE-APPLICATION OF LIME AND FERTILIZERS, AND/OR THE ADDITION OF ORGANIC MATTER (I.E. COMPOST) AS A TOP DRESSING. SUCH ADDITIONAL MEASURES SHALL BE BASED ON SOIL TESTS SUCH AS THOSE OFFERED BY RUTGERS COOPERATIVE EXTENSION SERVICE OR OTHER APPROVED LABORATORY FACILITIES QUALIFIED TO TEST SOIL SAMPLES FOR AGRONOMIC PROPERTIES.

TOPSOILING NOTES

1. TOPSOIL SHOULD BE HANDLED ONLY WHEN IT IS DRY ENOUGH TO WORK WITHOUT DAMAGING SOIL STRUCTURE.
2. A UNIFORM APPLICATION TO AN AVERAGE DEPTH OF 5" (MINIMUM 4") FIRMED IN PLACE IS REQUIRED.
3. PURSUANT TO THE REQUIREMENTS IN SECTION 7 OF THE STANDARD FOR PERMANENT VEGETATIVE STABILIZATION, THE CONTRACTOR IS RESPONSIBLE TO ENSURE THAT PERMANENT VEGETATIVE COVER BECOMES ESTABLISHED ON AT LEAST 80% OF THE SOILS TO BE STABILIZED WITH VEGETATION. FAILURE TO ACHIEVE THE MINIMUM COVERAGE MAY REQUIRE ADDITIONAL WORK TO BE PERFORMED.

SEEDING SPECIFICATIONS - TEMPORARY

TEMPORARY VEGETATIVE COVER SHALL CONSIST OF ANNUAL RYEGRASS APPLIED UNIFORMLY AT A RATE OF 2.3 POUNDS PER 1,000 SQ.FT. (100 lbs/Ac.). LIMESTONE (PULVERIZED DOLOMITIC EQUIVALENT TO 50 PERCENT CALCIUM PLUS MAGNESIUM OXIDES) SHALL BE APPLIED AT THE RATE OF 135 lbs/1,000 SQ. FT. (3 TONS/Ac.) AND FERTILIZER (10-20-10 OR EQUIVALENT) AT THE RATE OF 14 lbs/1,000 SQ. FT. (600 lbs./Ac.).

MULCHING IS REQUIRED ON ALL SEEDING AND SHALL BE ACCOMPLISHED AS FOLLOWS:

A. MULCH MATERIALS SHOULD BE UNROTTED SALT HAY, HAY, OR SMALL GRAIN STRAW AT A RATE OF 1-1/2 TO 2 TONS PER ACRE, OR 70 TO 90 POUNDS PER 1,000 SQUARE FOOT. MULCH BLOWERS SHOULD NOT GRIND OR CHOP THE MATERIAL.

B. SPREAD UNIFORMLY BY HAND OR MECHANICALLY SO THAT APPROXIMATELY 75 PERCENT TO 95 PERCENT OF THE SOIL SURFACE WILL BE COVERED. FOR UNIFORM DISTRIBUTION OF HAND SPREAD MULCH, DIVIDE AREA INTO APPROXIMATELY 1,000 SQUARE FOOT SECTIONS AND DISTRIBUTE 70 TO 90 POUNDS WITHIN EACH SECTION.

C. MULCH ANCHORING SHALL BE ACCOMPLISHED USING EITHER PEG AND TWINE, MULCH NETTING, MULCH-ANCHORING TOOL OR LIQUID MULCH BINDERS, PER THE ACCOMPANYING "STABILIZATION WITH MULCH ONLY"

SEEDING SPECIFICATIONS - PERMANENT

1. TOPSOIL TO BE PLACED TO A DEPTH OF 3 INCHES ON EXPOSED SOILS UPON COMPLETION OF FINAL GRADING.
2. LIMESTONE AND FERTILIZER ARE TO BE APPLIED ACCORDING TO THE ACCEPTED SOILS TEST RESULTS. IN LIEU OF TEST RESULTS, PULVERIZED DOLOMITIC LIMESTONE EQUIVALENT TO 50 PERCENT CALCIUM PLUS MAGNESIUM OXIDES, IS TO BE APPLIED AT A RATE OF 135 lbs/1,000 SQ. FT. (3 TONS/Ac.) AND 10-20-10 FERTILIZER WILL BE APPLIED AT A RATE OF 14 lbs/1,000 SQ. FT. (600 lbs/Ac.) OR EQUIVALENT. SUITABLE EQUIPMENT WILL BE USED TO PREPARE A REASONABLE, UNIFORM, FINE SEED BED TO A MINIMUM DEPTH OF 4 INCHES.
3. SEED IS TO BE UNIFORMLY APPLIED TO THE NORMAL DEPTH OF 1/4 INCH TO $\frac{1}{2}$ INCH (EXCEPT HYDRO SEEDING).

SEEDING DATES: 3/15, - 5/1 AND 8/15 - 10/15

SEED MIXTURE:	POUNDS PER ACRE	SEED TYPE
	130	TALL FESCUE*
	25	PERENNIAL RYE GRASS
	45	KENTUCKY BLUEGRASS

***CONTRACTOR SHALL INCLUDE AT LEAST 3 VARIETIES IN THE MIX AND SHALL INCLUDE K-31**

4. TOP DRESSING: SPRING SEEDINGS WILL REQUIRE AN APPLICATION OF FERTILIZER SUCH AS 10-10-10 OR EQUIVALENT AT 400 lbs/Ac.OR 10 lbs/1,000 SQ.FT. BETWEEN MARCH 15 AND MAY 1 AS WELL AS SEPTEMBER 1 AND OCTOBER 15.
***MAY BE PLANTED THROUGHOUT SUMMER IF SOIL MOISTURE IS ADEQUATE OR SOIL CAN BE IRRIGATED.**

5. MULCHING WILL BE ACCOMPLISHED PER THE ABOVE TEMPORARY SEEDING SPECIFICATION.

NOTES:
- CONTRACTOR SHALL BE RESPONSIBLE FOR MAINTAINING ALL PERMANENT SOIL EROSION AND SEDIMENT CONTROL MEASURES DURING CONSTRUCTION. THE PROPERTY OWNERS SHALL ASSUME THIS RESPONSIBILITY AFTER CONSTRUCTION IS COMPLETED AND CERTIFICATES OF OCCUPANCY ARE ISSUED.
- THE SOIL EROSION INSPECTOR MAY REQUIRE ADDITIONAL SOIL EROSION MEASURES TO BE INSTALLED, AS DIRECTED BY THE DISTRICT INSPECTOR.
- THE CONTRACTOR IS RESPONSIBLE FOR KEEPING THE ROADWAYS CLEAN AT ALL TIMES. ANY SEDIMENT SPILLED OR TRACKED ON THE ROADWAY WILL BE CLEANED UP IMMEDIATELY, OR AT MINIMUM, BY THE END OF EACH WORK DAY.

CONSTRUCTION SEQUENCE

EXACT TIMING FOR DEVELOPMENT OF THIS PROJECT IS NOT KNOWN AT THIS TIME. HOWEVER, IT IS ANTICIPATED THAT CONSTRUCTION WILL COMMENCE IN THE SPRING OF 2026 AND WILL PROCEED IMMEDIATELY AND CONTINUOUSLY ONCE THE REQUIRED APPROVALS ARE SECURED. ITEMS AND DURATIONS OF CONSTRUCTION WILL OCCUR APPROXIMATELY AS FOLLOWS:

PHASE	DURATION
1. TEMPORARY SOIL EROSION FACILITIES	IMMEDIATELY
2. STORMWATER BASIN AND SIDE SLOPES	IMMEDIATELY
3. MAINTENANCE OF TEMPORARY EROSION CONTROL MEASURES	CONTINUOUSLY
4. HANGAR AND CONCRETE APRON	6 MONTHS
5. PROJECT COMPLETION (CLEANUP & RESEEDING STAGING AREA)	6 MONTHS

***TEMPORARY SEEDING SHALL ALSO BE PERFORMED WHEN NECESSARY IN ACCORDANCE WITH NOTE No. 2 OF THE SOIL EROSION AND SEDIMENT CONTROL NOTES.**

STANDARD FOR STABILIZATION WITH MULCH ONLY

DEFINITION

STABILIZING EXPOSED SOILS WITH NON-VEGETATIVE MATERIALS.

PURPOSE

TO PROTECT EXPOSED SOIL SURFACES FROM EROSION DAMAGE AND TO REDUCE OFFSITE ENVIRONMENTAL DAMAGE.

WHERE APPLICABLE

THIS PRACTICE IS APPLICABLE TO AREAS SUBJECT TO EROSION, WHERE THE SEASON AND OTHER CONDITIONS MAY NOT BE SUITABLE FOR GROWING AN EROSION-RESISTANT COVER OR WHERE STABILIZATION IS NEEDED FOR A SHORT PERIOD UNTIL MORE SUITABLE PROTECTION CAN BE APPLIED.

METHODS AND MATERIALS

I. SITE PREPARATION

A. GRADE, AS NEEDED AND FEASIBLE, TO PERMIT THE USE OF CONVENTIONAL EQUIPMENT FOR APPLYING AND ANCHORING MULCH. ALL GRADING SHOULD BE DONE IN ACCORDANCE WITH STANDARD FOR LAND GRADING, PAGE 4.11.

A. EMPLOY NEEDED EROSION CONTROL PRACTICES SUCH AS DIVERSIONS, GRADE STABILIZATION STRUCTURES, CHANNEL STABILIZATION MEASURES, SEDIMENT BASINS AND WATERWAYS. SEE STANDARDS 4.2 THROUGH 4.16.

II. PROTECTIVE MATERIALS

A. UNROTTED SMALL-GRAIN STRAW, HAY OR SALT HAY AT 2.0 TO 2.5 TONS PER ACRE IS SPREAD UNIFORMLY AT 90 TO 115 POUNDS PER 1000 SQUARE FEET AND ANCHORED WITH A MULCH ANCHORING TOOL, LIQUID MULCH BINDERS OR NETTING TIEDOWN. OTHER SUITABLE MATERIALS MAY BE USED IF APPROVED BY THE SOIL CONSERVATION DISTRICT.

B. SYNTHETIC OR ORGANIC SOIL STABILIZERS MAY BE USED - UNDER SUITABLE CONDITIONS AND IN SUFFICIENT QUANTITIES.

C. WOOD-FIBER OR PAPER-FIBER MULCH AT A RATE OF 1,500 POUNDS PER ACRE, MAY BE APPLIED BY A HYDROSEEDER OR HYDROMULCHING.

D. MULCH NETTING, SUCH AS PAPER JUTE, EXCELSIOR, COTTON OR PLASTIC, MAY BE USED.

E. WOODCHIPS APPLIED UNIFORMLY TO A MINIMUM DEPTH OF 2 INCHES MAY BE USED. WOODCHIPS WILL NOT BE USED ON AREAS WHERE FLOWING WATER COULD WASH THEM INTO AN INLET AND PLUG IT.

F. GRAVEL, CRUSHED STONE OR SLAG AT THE RATE OF 9 CUBIC YARDS PER 1000 SQ. FT. APPLIED UNIFORMLY TO A MINIMUM DEPTH OF 3 INCHES MAY BE USED. SIZE 2 OR 3 (ASTM C-33) IS RECOMMENDED.

III. MULCH ANCHORING - SHOULD BE ACCOMPLISHED IMMEDIATELY AFTER PLACEMENT OF HAY OR STRAW TO MINIMIZE LOSS BY WIND OR WATER. THIS MAY BE DONE BY ONE OF THE FOLLOWING METHODS, DEPENDING UPON THE SIZE OF THE AREA AND STEEPNESS OF SLOPES.

A. PEG AND TWINE - DRIVE 8 TO 10 INCH WOODEN PEGS TO WITHIN 2 TO 3 INCHES OF THE SOIL SURFACE EVERY 4 FEET IN ALL DIRECTIONS. STAKES MAY BE DRIVEN BEFORE OR AFTER APPLYING MULCH. SECURE MULCH TO SOIL SURFACE BY STRETCHING TWINE BETWEEN PEGS IN A CRISS-CROSS AND A SQUARE PATTERN. SECURE TWINE AROUND EACH PEG WITH TWO OR MORE ROUND TURNS.

B. MULCH NETTINGS - STAPLE PAPER, COTTON, OR PLASTIC NETTINGS OVER HAY OR STRAW MULCH. USE A DEGRADABLE NETTING IN AREAS TO BE MOWED. NETTING IS USUALLY AVAILABLE IN ROLLS 4 FEET WIDE AND UP TO 300 FEET LONG.

C. MULCH ANCHORING TOOL - A TRACTOR-DRAWN IMPLEMENT ESPECIALLY DESIGNED TO PUNCH AND ANCHOR MULCH INTO THE SOIL SURFACE. THIS PRACTICE AFFORDS MAXIMUM EROSION CONTROL, BUT ITS USE IS LIMITED TO THOSE SLOPES UPON WHICH THE TRACTOR CAN OPERATE SAFELY. TOOL PENETRATION SHOULD BE ABOUT 3 TO 4 INCHES. ON SLOPING LAND, THE OPERATION SHOULD BE DONE ON THE CONTOUR.

D. LIQUID MULCH-BINDERS
1. APPLICATIONS SHOULD BE HEAVIER AT EDGES WHERE WIND CATCHES THE MULCH, IN VALLEYS AND AT CRESTS OF BANKS. REMAINDER OF AREA SHOULD BE UNIFORM IN APPEARANCE.

2. USE OF ONE OF THE FOLLOWING:

(a) SYNTHETIC OR ORGANIC BINDERS - BINDERS SUCH AS CURASOL, DCA-70, PETRO-SET AND TERRA-TACK MAY BE USED AT RATES RECOMMENDED BY THE MANUFACTURER TO ANCHOR MULCH MATERIALS.

NOTE: ALL NAMES GIVEN ABOVE ARE REGISTERED TRADE NAMES. THIS DOES NOT CONSTITUTE A RECOMMENDATION OF THESE PRODUCTS OR THE EXCLUSION OF OTHER PRODUCTS.

RIPRAP SPECIFICATIONS

RIPRAP GRADATION
THE RIPRAP SHALL BE COMPOSED OF A WELL-GRADED MIXTURE SUCH THAT 50% OF THE MIXTURE BY WEIGHT SHALL BE LARGER THAN THE d50 SIZE AS DETERMINED FROM THE DESIGN PROCEDURE. A WELL-GRADED MIXTURE AS USED HEREIN IS DEFINED AS A MIXTURE COMPOSED PRIMARILY OF THE LARGER STONE SIZES BUT WITH A SUFFICIENT MIXTURE OF OTHER SIZES TO FILL THE PROGRESSIVELY SMALLER VOIDS BETWEEN THE STONES. THE DIAMETER OF THE LARGEST STONE SIZE IN SUCH A MIXTURE SHALL BE 1.5 TIMES THE d50 SIZE.

THE DESIGNER AFTER DETERMINING THE RIPRAP SIZE THAT WILL BE STABLE UNDER THE FLOW CONDITION SHALL CONSIDER THAT SIZE TO BE A MINIMUM SIZE AND THEN, BASED ON RIPRAP GRADATIONS ACTUALLY AVAILABLE IN THE AREA SELECT, THE SIZE OR SIZES THAT EQUAL OR EXCEED THE MINIMUM SIZE. THE POSSIBILITY OF VANDALISM SHALL BE CONSIDERED BY THE DESIGNER IN SELECTING RIPRAP SIZE. IF THE d50 SIZE IS INCREASED, THE APRON THICKNESS SHALL BE INCREASED PROPORTIONATELY.

FILTER
SYNTHETIC FILTER FABRIC SHALL MEET THE U.S. ARMY CORPS OF ENGINEERS GUIDE SPECS, CW02215, NOVEMBER 1977 FOR STRENGTH. RIPRAP THAT IS 12" AND LARGER SHALL NOT BE DUMPED DIRECTLY ONTO SYNTHETIC FILTER CLOTH UNLESS THE MANUFACTURER RECOMMENDS SUCH USE OF THE CLOTH. OTHERWISE, A 4" MINIMUM THICKNESS BLANKET OF GRAVEL SHALL BE PLACED DIRECTLY ON THE FILTER CLOTH BY HAND OR BY THE BUCKET OF THE EQUIPMENT.

QUALITY
STONE FOR RIPRAP SHALL CONSIST OF FIELD STONE OR QUARRY STONE OF APPROXIMATELY RECTANGULAR SHAPE. THE STONE SHALL BE HARD AND ANGULAR AND OF SUCH QUALITY THAT IT WILL NOT DISINTEGRATE ON EXPOSURE TO WATER OR WEATHERING THE SPECIFIC GRAVITY OF THE INDIVIDUAL STONE SHALL BE AT LEAST 2.5.

RUBBLE CONCRETE MAY BE USED, PROVIDED IT HAS A DENSITY OF AT LEAST 150 POUNDS PER CUBIC FOOT, AND OTHERWISE MEETS THE REQUIREMENTS OF THIS STANDARD.

A1 **EROSION AND SEDIMENT CONTROL NOTES**
SCALE: NOT TO SCALE

C&S COMPANIES®
C&S Engineers, Inc.
1600 Market Street,
Suite 3450
Philadelphia, PA 19103
Phone: (215) 709-4340
www.cscos.com

STATE OF NEW JERSEY — RICHARD M. MCLAUGHLIN — No. 24GE05298800 — LICENSED PROFESSIONAL ENGINEER
February 25, 2025

DRBA DELAWARE RIVER & BAY AUTHORITY

WWD HANGAR DESIGN
DELAWARE RIVER AND BAY AUTHORITY
505 FORESTAL ROAD
CAPE MAY, NJ 08242

MARK	DATE	DESCRIPTION

REVISIONS

PROJECT NO:	872.013.088
DATE:	MARCH 2024
DRAWN BY:	M. ZINGARO
DESIGNED BY:	S. MEARON
CHECKED BY:	S.H. SHOVA

CONTRACTOR SHALL VERIFY ALL CONDITIONS ON JOB SITE & NOTIFY THE OWNER OF ANY VARIATIONS FROM DIMENSIONS SHOWN ON THESE DRAWINGS BEFORE PROCEEDING WITH ANY CONSTRUCTION.

EROSIONS AND SEDIMENT CONTROL NOTES

C-504

Copyright ©

Mar 06, 2024 - 12:37pm
F:\Projects\872 - DELAWARE RIVER & BAY AUTHORITY\872013088 WWD Hangar Design\Design\CADD\Sheet Files\872013088_C-504.dwg

ABBREVIATIONS

AB	ANCHOR BOLT(S)
ACI	AMERICAN CONCRETE INSTITUTE
ADDL	ADDITIONAL
AESS	ARCHITECTURALLY EXPOSED STRUCTURAL STEEL
AFF	ABOVE FINISH FLOOR
AISC	AMERICAN INSTITUTE OF STEEL CONSTRUCTION
ALT	ALTERNATE
ALUM	ALUMINUM
ASCE	AMERICAN SOCIETY OF CIVIL ENGINEERS
ASTM	AMERICAN SOCIETY FOR TESTING AND MATERIALS
AWS	AMERICAN WELDING SOCIETY
AVG	AVERAGE
BP	BASE PLATE
B/CONC	BOTTOM OF CONCRETE
B/FTG	BOTTOM OF FOOTING
B/DECK	BOTTOM OF DECK
BLDG	BUILDING
B/MAT	BOTTOM OF MAT
BPE	BOTTOM OF PILE ELEVATION
B/SLAB	BOTTOM OF SLAB
B/STL	BOTTOM OF STEEL
CC	CONCRETE COLUMN
CB	CONCRETE BEAM
CALCS	CALCULATIONS
CIP	CAST IN PLACE
CJ	CONTROL JOINT OR CONSTRUCTION JOINT
CJP	COMPLETE JOINT PENETRATION
CLR	CLEAR
CMU	CONCRETE MASONRY UNIT
COL	COLUMN
CONC	CONCRETE
CONT	CONTINUOUS
℄	CENTERLINE
D	COMPOSITE STEEL DECK/STEEL ROOF DECK/FORM DECK
Db	DIAMETER OF REBAR
DBL	DOUBLE
DEPR	DEPRESSION
DEG	DEGREE
DTL	DETAIL
DIA	DIAMETER
DIAG	DIAGONAL
DIM	DIMENSION
DL	DEAD LOAD
DN	DOWN
DP	DRILLED PIER
E	MODULUS OF ELASTICITY
EA	EACH
EF	EACH FACE
EFEW	EACH FACE, EACH WAY
EJ	EXPANSION JOINT
ELEC	ELECTRICAL
EL	ELEVATION
EMB	EMBEDMENT
EOS	EDGE OF SLAB
EQ	EQUAL
EQUIP	EQUIPMENT
EW	EACH WAY
EXIST	EXISTING
EXP	EXPANSION
EXT	EXTERIOR
FDN	FOUNDATION
FF	FINISH FLOOR
FIN	FINISH
FD	FLOOR DRAIN
FLG	FLANGE
FLR	FLOOR
FRMG	FRAMING
F.S.	FOUNDATION STEP
FT	FOOT (FEET)
FTG	FOOTING
FY	YIELD STRESS STEEL
G	GRATING
GA	GAGE OR GAUGE
GALV	GALVANIZED
GB	GRADE BEAM
HSA	HEADED STUD ANCHOR
HORIZ	HORIZONTAL
H.P.	HIGH POINT
HS	HIGH STRENGTH
HT	HEIGHT
I (IN4)	MOMENT OF INERTIA
IBC	INTERNATIONAL BUILDING CODE
ICC	INTERNATIONAL CODE COUNCIL
ID	INSIDE DIAMETER
IN	INCH
INFO	INFORMATION
INT	INTERIOR
JT	JOINT
K	KIP = 1000 LBS
KSI	KIPS PER SQUARE INCH

L	LEDGER
LBS	POUND(S)
Ldh	REBAR DEVELOPMENT LENGTH
Lext	REBAR STRAIGHT EXTENSION
L90	REBAR 90 DEGREE HOOK LENGTH
L135	REBAR 135 DEGREE HOOK LENGTH
L180	REBAR 180 DEGREE HOOK LENGTH
LL	LIVE LOAD
LLH	LONG LEG HORIZONTAL
LLV	LONG LEG VERTICAL
LSH	LONG SIDE HORIZONTAL
LSV	LONG SIDE VERTICAL
LP	LOW POINT
LWC	LIGHT WEIGHT CONCRETE
MATL	MATERIAL
MAX	MAXIMUM
MCJ	MASONRY CONTROL JOINT
MECH	MECHANICAL
MEZZ	MEZZANINE
MFR	MANUFACTURER
MID	MIDDLE
MIN	MINIMUM
MISC	MISCELLANEOUS
MEP	MECHANICAL, ELECTRICAL AND PROCESS
MTL	METAL
MO	MASONRY OPENING
NAAMM	NATIONAL ASSOCIATION OF ARCHITECTURAL METAL MANUFACTURERS
NF	NEAR FACE
NIC	NOT IN CONTRACT
NO	NUMBER
NS	NEAR SIDE
NTS	NOT TO SCALE
O.C.	ON CENTER
O.C.E.W.	ON CENTER, EACH WAY
OPP	OPPOSITE
PCI	PRESTRESSED CONCRETE INSTITUTE
PC	PILE/PIER CAP
PCF	POUNDS PER CUBIC FOOT
PL	PLATE
PLF	POUNDS PER LINEAR FOOT
PSI	POUNDS PER SQUARE INCH
PT, P/T	POST-TENSIONED
PSF	POUNDS PER SQUARE FOOT
QTY	QUANTITY
RO	ROOF OPENING
RAD	RADIUS
REINF	REINFORCED OR REINFORCING
SDI	STEEL DECK INSTITUTE
SL	SNOW LOAD
SIM	SIMILAR
SJI	STEEL JOIST INSTITUTE
SOG	SLAB ON GRADE
SPEC	SPECIFICATION
SQ	SQUARE
SS	STAINLESS STEEL
STD	STANDARD
STIFF	STIFFENER
STL	STEEL
SW	SHEARWALL
T/BTM CHORD	TOP OF BOTTOM CHORD
T&B	TOP AND BOTTOM
T/CAP	TOP OF CAP
T/CONC.	TOP OF CONCRETE
T/CURB	TOP OF CURB
T/DECK	TOP OF DECK
T/FTG	TOP OF FOOTING
T/GRADE	TOP OF GRADE
T/GRATING	TOP OF GRATING
TL	TOTAL LOAD
T/MAT	TOP OF MAT
T/PC	TOP OF PILE CAP
T/PIER	TOP OF PIER ELEVATION
T/SLAB	TOP OF SLAB
T/S	TOP OF STEEL
T/WALL	TOP OF WALL ELEVATION
TYP	TYPICAL
UL	UNDERWRITERS LABORATORIES
UNO	UNLESS NOTED OTHERWISE
UT	ULTRASONIC TESTING
VERT	VERTICAL
WP	WORK POINT
WWR	WELDED WIRE REINFORCEMENT
WF	WALL FOOTING
W	WALL
X-STRONG	EXTRA STRONG
XX-STRONG	DOUBLE EXTRA STRONG
#	NUMBER

DESIGN CRITERIA

1. CODES AND REFERENCE STANDARDS: 2021 INTERNATIONAL BUILDING CODE - NEW JERSEY EDITION
2. DESIGN DATA:
   - ROOF LIVE LOAD: 20 PSF
   - COLLATERAL ROOF LOAD: 10 PSF
   - A. WIND LOAD (3-SEC. GUST): BASIC WIND SPEED
     - ULTIMATE WIND SPEED: 121 MPH
     - RISK CATEGORY: II
     - EXPOSURE CATEGORY: C
     - WIND-BORNE DEBRIS REGION NA
   - B. SNOW LOAD
     - GROUND SNOW LOAD 20 PSF
     - FLAT-ROOF SNOW LOAD 20 PSF
     - SNOW EXPOSURE FACTOR (Ce) 0.9
     - SNOW IMPORTANCE FACTOR (Is) 1.0
     - THERMAL FACTOR (Ct) 1.2
     - DRIFT LOADS CALCULATED PER ASCE 7-16
   - C. SEISMIC:

RISK CATEGORY	II
SEISMIC IMPORTANCE FACTOR	1.0
SS	0.109
S1	0.038
SITE CLASS	D
Sds	0.116
Sd1	0.061
SEISMIC DESIGN CATEGORY	A
RESPONSE MODIFICATION COEFFICIENT, R	3
SEISMIC RESPONSE COEFFICIENT, Cs	0.01

GENERAL: (THE FOLLOWING REQUIREMENTS TOGETHER WITH THE PROJECT PLANS AND SPECIFICATIONS SHALL APPLY TO THE STRUCTURES IN THIS CONTRACT.)

1. THE CONTRACTOR IS RESPONSIBLE FOR THE SURVEY AND FIELD VERIFYING ALL EXISTING CONDITIONS.
2. WORK ON STRUCTURAL DRAWINGS REPRESENTS FINAL CONDITIONS. CONTRACTOR SHALL BE RESPONSIBLE FOR THE STRUCTURAL STABILITY OF ALL INTERMEDIATE CONDITIONS DURING CONSTRUCTION.
3. THE CONTRACTOR SHALL COORDINATE THE GENERALURAL, PLUMBING, HVAC, AND ELECTRICAL DRAWINGS AND SPECIFICATIONS FOR ADDITIONAL INFORMATION NOT INDICATED ON THE STRUCTURAL DRAWINGS. SUCH INFORMATION INCLUDES, AS A MINIMUM, EMBEDDED SLEEVES AND INSERTS, MISCELLANEOUS DETAILS, SPECIAL FLOOR FINISHES, DOOR THRESHOLDS, SLOPES TO DRAINS, NAILERS, OPENINGS IN STRUCTURAL ELEMENTS, ETC.
4. IT IS THE SOLE RESPONSIBILITY OF THE CONTRACTOR TO DETERMINE ERECTION PROCEDURE AND SEQUENCE TO ENSURE THE SAFETY OF THE STRUCTURE AND ITS COMPONENT PARTS DURING ERECTION. THIS INCLUDES, BUT IS NOT LIMITED TO, THE ADDITION OF WHATEVER TEMPORARY BRACING, GUYS, TIE-DOWNS, AND/OR SHORING MAY BE NECESSARY. SUCH MATERIAL SHALL BE REMOVED AND SHALL REMAIN THE PROPERTY OF THE CONTRACTOR AFTER THE COMPLETION OF THE PROJECT.
5. IT SHALL BE THE SOLE RESPONSIBILITY OF THE CONTRACTOR FOR INITIATING, MAINTAINING, AND SUPERVISING ALL SAFETY PROCEDURES. THE STRUCTURAL ENGINEER OF RECORD IS NOT RESPONSIBLE FOR MEANS AND METHODS OF CONSTRUCTION OR FOR RELATED SAFETY PROCEDURES.
6. TYPICAL NOTES AND DETAILS SHOWN ON STRUCTURAL TYPICAL DETAILS SHALL BE APPLICABLE TO ALL PARTS OF THE STRUCTURAL WORK EXCEPT WHERE SPECIFICALLY REQUIRED OTHERWISE ON THE CONTRACT DOCUMENTS. DETAILS NOT SPECIFICALLY SHOWN SHALL BE SIMILAR TO THOSE SHOWN FOR THE MOST NEARLY SIMILAR CONDITION ON THE DRAWINGS AS DETERMINED BY THE ENGINEER.
7. DO NOT SCALE DRAWING DIMENSIONS. IN THE EVENT OF A GRID LINE DIMENSION CONFLICT, THE GENERALURAL DRAWINGS SHALL GOVERN.
8. THE CONTRACTOR SHALL SUBMIT COMPLETE SHOP DRAWINGS FOR ALL PARTS OF THE WORK INCLUDING DESCRIPTION OF DEMOLITION, TEMPORARY BRACING, CONSTRUCTION METHODS AND SEQUENCING, WHERE APPLICABLE NO PERFORMANCE OF WORK SHALL COMMENCE WITHOUT REVIEW OF THE SHOP DRAWINGS BY THE ENGINEER.
9. FABRICATION PRIOR TO THE RECEPT OF AN APPROVED SHOP DRAWINGS SHALL BE AT THE CONTRACTOR'S OWN RISK AND THAT INSTALLATION OF ANY WORK PRIOR TO RECEIPT OF AN APPROVED SHOP DRAWING SHALL BE STRICTLY PROHIBITED.
10. FOR ELEVATIONS REFER TO THE PLAN SHEETS.
11. DRILLING, CORING, SAW CUTTING AND ETC. INTO CONCRETE SHALL MEET THE LATEST OSHA REGULATIONS FOR SILICA DUST EXPOSURE.
12. DO NOT PLACE MATERIALS OR EQUIPMENT ON UNFINISHED FLOORS OR ROOFS IN EXCESS OF 20 PSF NOR ON FINISHED FLOORS OR ROOFS IN EXCESS OF THE INDICATED DESIGN LIVE LOADS. AVOID IMPACT LOADING.
13. INFORMATION RELATED TO EXISTING CONDITIONS REPRESENTS KNOWLEDGE BASED UPON INFORMATION PROVIDED BY THE OWNER BUT WITHOUT GUARANTEE OF ACCURACY. REPORT EXISTING CONDITIONS THAT VARY FROM THOSE SHOWN ON THE CONTRACT DOCUMENTS TO THE OWNER'S REPRESENTATIVE. DO NOT DEVIATE FROM THE CONTRACT DOCUMENTS WITHOUT WRITTEN DIRECTION FROM THE OWNER'S REPRESENTATIVE.
14. THE CONTRACTOR SHALL BE RESPONSIBLE FOR DAMAGE TO EXISTING CONSTRUCTION WHILE PERFORMING WORK. THE CONTRACTOR SHALL PROPERLY REINSTATE EXISTING FINISHES, FIREPROOFING OR ITEMS THAT ARE REMOVED OR DAMAGED WHILE PERFORMING WORK.

EXCAVATION AND FILL

1. DEWATER, EXCAVATE, FILL AND COMPACT SOIL IN PREPARATION FOR SLAB ON GRADE, WALLS, AND FOUNDATON IN ACCORDANCE WITH THE RECOMMENDATIONS IN THE GEOTECHNICAL REPORT
2. ALL EXCAVATIONS SHALL BE DEWATERED TO MAINTAIN GROUNDWATER AT LEAST 24" BELOW FOOTING BEFORE PLACING OF CONCRETE.
3. SLOPE THE EXTERIOR GRADE AWAY FROM THE STRUCTURE. REFER TO CIVIL PLANS FOR DETAILS.
4. PROVIDE TEMPORARY OR PERMANENT SUPPORTS, SHORING, SHEETING OR BRACING SO THAT NO HORIZONTAL MOVEMENT OR VERTICAL SETTLEMENT OCCURS TO ADJACENT STRUCTURES, STREETS, SOILS OR UTILITIES ADJACENT TO OR WITHIN THE PROJECT SITE.
5. BACKFILL SHALL BE PLACED IN COMPACTED LIFTS PER THE EARTHWORK SPECIFICATIONS.
6. NO FOUNDATION CONCRETE SHALL BE PLACED IN WATER.
7. DO NOT BACKFILL BEHIND FOUNDATION WALLS UNTIL THE PERMANENT LATERAL SUPPORT SYSTEM IS IN PLACE AND OF FULL STRENGTH.
8. COMPONENTS OF ANY SUPPORT OF EXCAVATION SYSTEM SHALL REMAIN IN PLACE UNTIL ALL PERMANENT STRUCTURAL SYSTEMS AT AND BELOW GROUND ARE IN PLACE.

FOUNDATION

1. THE FOUNDATION HAS BEEN DESIGNED IN ACCORDANCE WITH THE RECOMMENDATIONS CONTAINED IN THE GEOTECHNICAL REPORT
2. THE GEOTECHNICAL REPORT IS AVAILABLE TO THE CONTRACTOR UPON REQUEST TO THE OWNER. THE ENGINEER WILL NOT BE RESPONSIBLE FOR THE ACCURACY OR APPLICABILITY SUCH DATA THEREIN.
3. NO RESPONSIBILITY IS ASSUMED BY THE ENGINEER FOR THE VALIDITY OF THE SUBSURFACE CONDITIONS DESCRIBED ON THE DRAWINGS, SPECIFICATIONS, TEST BORINGS, OR TEST PITS. THESE DATA ARE INCLUDED ONLY TO ASSIST THE CONTRACTOR DURING BIDDING AND SUBSEQUENT CONSTRUCTION. THEY REPRESENT CONDITIONS ONLY AT THE SPECIFIC LOCATIONS AT THE TIME DATA WAS COLLECTED.
4. MAXIMUM ALLOWABLE SOIL BEARING PRESSURE = 2,500 PSF
5. FOOTINGS TO BEAR ON NATURAL UNDISTURBED SOIL OR COMPACTED FILL PER THE GEOTECHNICAL ENGINEER'S RECOMMENDATIONS TO EXHIBIT A DENSITY OF AT LEAST 95 PERCENT OF THE MAXIMUM DRY DENSITY AS DETERMINED BY ASTM D 1557 (MODIFIED PROCTOR).
6. GEOTECHNICAL ENGINEER MUST REVIEW THE FINAL SITE AND GRADING PLANS TO VALIDATE ALL RECOMMENDATIONS SET FORTH IN THE GEOTECHNICAL REPORT AND CONFIRM THEIR FINDINGS. THE CONTRACTOR SHALL BE RESPONSIBLE FOR COORDINATION OF INSPECTIONS OR EXAMINATIONS PRIOR TO CONSTRUCTION COMMENCEMENT.
7. PERFORM SOIL COMPACTION TESTING, AT LEAST ONE TEST EVERY 100 FEET OF WALL FOOTING. PROVIDE A MINIMUM OF 4 SOIL COMPACTION TESTS AT EVERY BUILDING.

CONCRETE

1. CONCRETE SHALL CONFORM TO THE REQUIREMENTS OF ACI 301 - SPECIFICATIONS FOR STRUCTURAL CONCRETE FOR BUILDINGS.
2. STANDARDS:
   - DESIGN: ACI 318 - 2014
   - DETAILS: ACI 315 – LASTEST EDITION
   - MATERIALS: ACI 301 – LASTEST EDITION
3. DESIGN STRENGTH:
   - SLAB ON GRADE: 4000 PSI COMPRESSIVE STRENGTH @ 28 DAYS, NORMAL WEIGHT CONCRETE
   - FOUNDATIONS: 4000 PSI COMPRESSIVE STRENGTH @ 28 DAYS, NORMAL WEIGHT CONCRETE
   - BEAMS: 4000 PSI COMPRESSIVE STRENGTH @ 28 DAYS, NORMAL WEIGHT CONCRETE
4. SUBMIT PROPOSED CONCRETE MIX DESIGN TO THE OWNER'S REPRESENTATIVE AND TESTING LABORATORY CONCURRENTLY FOR REVIEW AND APPROVAL.
5. CONCRETE COVER OVER BARS:
   - CONCRETE DEPOSITED ON GROUND 3".
   - FORMED CONCRETE EXPOSED TO GROUND, WEATHER OR WATER 2".
   - WALLS & SLABS NOT DIRECTLY EXPOSED TO GROUND, WATER, OR WEATHER 1-1/2".
6. CLEAN AND APPLY BONDING AGENT TO ALL EXISTING CONCRETE SURFACES TO RECEIVE NEW CONCRETE. ALL CONCRETE TO CONFORM WITH THE LATEST ACI BUILDING CODE REQUIREMENTS FOR REINFORCED CONCRETE. (ACI - 301)
7. SECTIONS AND DETAILS MAY NOT SHOW ALL REQUIRED CONCRETE REINFORCEMENT. ADDITIONAL REINFORCEMENT MAY BE DESCRIBED IN SCHEDULES (IF APPLICABLE) AND NOTES.
8. PROVIDE BAR SUPPORTS AND SPACERS IN ACCORDANCE WITH REQUIREMENTS OF ACI 315 UNLESS NOTED OTHERWISE.
9. NOT ALL ITEMS EMBEDDED IN THE CONCRETE ARE SHOWN ON THE STRUCTURAL DRAWINGS. THE CONTRACTOR SHALL BE RESPONSIBLE FOR COORDINATING THE INSTALLATION OF ALL OPENINGS AND EMBEDDED ITEMS IN THE CONCRETE PERTAINING TO THE DIFFERENT TRADES AS SHOWN ON THEIR PERSPECTIVE DRAWINGS: SLEEVES, MECHANICAL OPENINGS, CONDUITS, PIPES, RECESSES, DEPRESSIONS, CURBS, AND ALL EMBEDDED ITEMS SHALL BE PROVIDED AS SHOWN ON THE GENERAL, MECHANICAL, PLUMBING, AND ELECTRICAL DRAWINGS AND AS REQUIRED BY THE EQUIPMENT MANUFACTURERS.
10. EMBEDDED CONDUITS, PIPES, OR OTHER UTILITIES NOT SHOWN ON THE STRUCTURAL DRAWINGS SHALL NOT BE PERMITTED WITHOUT WRITTEN PERMISSION FROM THE ENGINEER. WHERE EMBEDDED ITEMS ARE ALLOWED, THEY SHALL BE SPACED NOT LESS THAN THREE DIAMETERS ON CENTER EACH WAY BUT WITH NOT LESS THAN TWO INCHES CLEAR SPACE BETWEEN EMBEDDED ITEMS. THE TOTAL DEPTH OF ALL EMBEDDED ITEMS AND THE CLEAR SPACE BETWEEN THEM SHALL NOT EXCEED 1/3 OF THE TOTAL CONCRETE DEPTH AND SHALL BE CONFINED TO THE MIDDLE THIRD OF THE CONCRETE DEPTH.
11. UNLESS OTHERWISE NOTED ON THE DRAWINGS, THE SIZE OF CONCRETE PLACEMENTS SHALL BE LIMITED AS FOLLOWS:
    a. SLABS ON GRADE: 30 FT MAX DIMENSION AND 900 SQ FT. (UNLESS INTERMEDIATE CONTROL JOINTS ARE PROVIDED)
12. PROVIDE 3/4" CHAMFER ON ALL EXPOSED CONCRETE EDGES U.N.O
13. THROUGH PENETRATIONS FOR CONCRETE WALLS OR SLABS SHALL CONFORM TO STANDARD DETAIL DRAWINGS.
14. MULTIPLE PENETRATIONS SHALL NOT BE SPACED CLOSER THAN THREE TIMES THE DIAMETER OR THREE TIMES THE WIDTH OF THE LARGER OPENING WITHOUT APPROVAL OF THE ENGINEER.

REINFORCING

1. REINFORCING:
   - BARS: ASTM A-615 GRADE 60 - DEFORMED.
2. SPLICES IN REINFORCEMENT: UNLESS OTHERWISE NOTED, ALL SPLICES AND ANCHORAGES SHALL BE PER ACI. STAGGER SPLICES WHEREVER POSSIBLE AND LOCATE SO AS NOT TO IMPAIR STRENGTH OF MEMBERS.
3. REINFORCEMENT WORK OF DETAILING, FABRICATION ,AND ERECTION SHALL CONFORM TO THE BUILDING CODE REQUIREMENTS FOR REINFORCED CONCRETE (ACI 318 (, ACI DETAILING MANUAL-2004 (SP 66) CRSI MANUAL OF STANDARD PRACTICE (MSP 2009), AND THE STRUCTURAL WELDING CODE- REINFORCING STEEL (AWS D1.1).
4. PROVIDE AND SCHEDULE ON SHOP DRAWINGS THE NECESSARY ACCESSORIES TO HOLD ALL REINFORCEMENT SECURELY IN POSITION.
5. WHERE CONTINUOUS REINFORCEMENT IS CALLED FOR, IT SHALL BE EXTENDED CONTINUOUSLY AROUND CORNERS AND LAPPED AT SPLICES OR AT DISCONTINUOUS ENDS. LAPS SHALL BE CLASS B TENSION LAP SPLICES UNLESS OTHERWISE NOTED.
6. WHERE REINFORCEMENT IS NOT SHOWN ON DRAWINGS, PROVIDE REINFORCEMENT IN ACCORDANCE WITH APPLICABLE DETAILS AS DETERMINED BY THE ENGINEER. IN NO CASE SHALL THE REINFORCEMENT BE LESS THAN THE MINIMUM PERMITTED BY THE APPLICABLE CODES.
7. WHERE REINFORCEMENT IS REQUIRED IN SECTION, REINFORCEMENT IS CONSIDERED TYPICAL WHEREVER THE SECTION APPLIES.
8. REINFORCEMENT SHALL BE CONTINUOUS THROUGH CONSTRUCTION JOINTS.
9. DOWELS SHALL MATCH BAR SIZES UNLESS OTHERWISE NOTED.
10. REINFORCEMENT SHALL NOT BE TACK WELDED. REINFORCING BARS TO BE WELDED SHALL CONFORM TO ASTM A706 FY=60KSI.
11. REINFORCEMENT INSTALLATION SHALL BE COMPLETED AT LEAST 24 HOURS BEFORE A CONCRETE PLACEMENT OR SHALL BE COORDINATED WITH THE OWNERS REPRESENTATIVE TO ENSURE PROPER TIME IS ALLOWED FOR THE INSPECTION OF THE REINFORCING. NOTIFY THE ENGINEER OF COMPLETION.
12. ALL REINFORCEMENT SHALL BE SECURELY TIED IN PLACE AT THE POSITIONS SHOWN ON THE DRAWINGS BEFORE PLACING CONCRETE.
13. UNLESS NOTED OTHERWISE, ALL BARS SHALL BE EMBEDDED TO A MINIMUM DEPTH (Ld OR Ldh)

SLAB ON GRADE PLACEMENT

1. ALL SLABS SHALL BE PLACED ON 4" OF FREE DRAINING COMPACTED GRANULAR MATERIAL WITH LESS THAN 5% FINES PASSING THE #200 SIEVE.
2. THE DESIGN OF CONCRETE MIXES, LOCATING OF CONSTRUCTION JOINTS IN SLABS, STAGGERING OF POUR PLACEMENTS, LOCATION OF POUR STRIPS, AND PLACEMENT AND CURING PROCEDURES ARE TO BE PERFORMED BY THE CONTRACTOR IN A MANNER THAT WILL MINIMIZE SHRINKAGE CRACKING OF THE SLABS.
3. PLACE INTERIOR SLABS ON VAPOR RETARDER (15 MIL. MIN UNO) WITH SOILS PREPARED PER THE GEOTECHNICAL ENGINEER'S RECOMMENDATIONS.
4. SUBSEQUENT PLACEMENT OF ALTERNATE SLAB STRIPS SHOULD NOT BE MADE SOONER THAN 24 HOURS AFTER THE COMPLETION OF SLAB FINISHING OPERATIONS AND THE INITIATION OF CURING PROCEDURES.
5. THE CONTRACTOR SHALL REPAIR ALL SHRINKAGE CRACKS DESIGNATED AS UNACCEPTABLE BY THE ENGINEER BY EPOXY INJECTION AT NO ADDITIONAL COST TO THE CONTRACT.
6. REPAIR MATERIAL SHALL BE APPROPRIATE FOR THE APPLICATION AS RECOMMENDED BY THE MANUFACTURER. PRODUCTS SHALL BE BY SIKA CORPORATION, OR APPROVED EQUAL.
7. THE CONTRACTOR SHALL SUBMIT TO THE OWNERS REPRESENTATIVE FOR REVIEW PRIOR TO THE DEVELOPMENT OF SLAB REINFORCING SHOP DRAWINGS, A PROPOSED SLAB CONSTRUCTION JOINT LAYOUT PLAN, ALONG WITH PROPOSED METHODS FOR CONTROLLING SHRINKAGE CRACKING IN THE SLABS. CONTROL JOINT SPACING NOT TO EXCEED 15 FEET IN ANY DIRECTION, WITH CONTROL JOINT LAYOUT CREATING RECTANGULAR SHAPED SLAB SECTIONS. CONTROL JOINT SLAB RECTANGULAR SHAPE CONFIGURATION NOT TO EXCEED A LENGTH TO WIDTH RATIO OF 1.5 IN ANY DIRECTION.

PRE-ENGINEERED METAL BUILDING:

1. METAL BUILDINGS SHALL BE DESIGNED AND FABRICATED UNDER THE DIRECT SUPERVISION OF A PROFESSIONAL ENGINEER LICENSED IN THE STATE OF NEW JERSEY. MANUFACTURER SHALL MEET THE MEMBERSHIP APPLICATION REQUIREMENTS OF MBMA.
2. DESIGN FOR THE METAL BUILDING SHALL MEET ALL CURRENT FBC 2020 REQUIREMENTS AND SHALL MEET THE FOLLOWING CRITERIA
   - A. WIND LOAD - BASIC WIND SPEED (3 SEC. GUST): 121 MPH (ULT)
     - RISK CATEGORY: II
     - EXPOSURE CATEGORY: [C]
3. FOUNDATION DESIGN HAS BEEN PREPARED USING PRELIMINARY REACTIONS DEVELOPED BASED ON INITIAL PEMB BUILDING LAYOUT AND LOADING CRITERIA. FINAL REACTIONS FOR PEMB SHALL BE PROVIDED FOR ENGINEER REVIEW UPON WHICH FOUNDATIONS DESIGN SHOWN HEREIN WILL BE REVIEWED AND REVISED AS NECESSARY. CONTRACTOR SHALL NOT COMMENCE FOUNDATION WORK WITHOUT RECEIVING ENGINEER APPROVAL AND/OR FOUNDATION DRAWINGS ISSUED FOR CONSTRUCTION AS A RESULT OF REQUIRED DESIGN CHANGES FOLLOWING REVIEW OF FINAL PEMB REACTIONS. CONTRACTOR DECISION TO PROCEED WITHOUT ENGINEER APPROVAL AND/OR WITHOUT REVISED CONSTRUCTION DOCUMENTS DOES SO AT THEIR OWN RISK.
4. PROVIDE STRUCTURAL DESIGN DATA FOR THE FRAMING MEMBERS AND COVERING OF THE METAL BUILDING SYSTEM NECESSARY TO SHOW COMPLIANCE WITH THE SPECIFICATIONS. THE STRUCTURAL DESIGN DATA INCLUDES MAGNITUDE AND LOCATION OF DESIGN LOADS AND SUPPORT CONDITIONS, MATERIAL PROPERTIES, AND THE TYPE AND SIZE OF STRUCTURAL MEMBERS. DESIGN DATA MAY BE MANUALLY OR COMPUTER GENERATED IN ACCORDANCE WITH THE METAL BUILDING SYSTEM MANUFACTURER'S USUAL PROCEDURES. METAL BUILDING DESIGN AND FABRICATION SUBMITTAL SHALL BE SIGNED AND SEALED BY A PROFESSIONAL ENGINEER LICENSED IN THE STATE OF NEW JERSEY.
   - A. PROVIDE A STATEMENT/LETTER BY THE DESIGN ENGINEER STATING THAT THE STRUCTURAL DESIGN OF THE METAL BUILDING IS IN COMPLIANCE WITH THE SPECIFIED CODE REQUIREMENTS. THIS LETTER SHALL BE SIGNED AND SEALED BY THE METAL BUILDING SYSTEM ENGINEER WHO IS A PROFESSIONAL ENGINEER LICENSED IN THE STATE OF NEW JERSEY.
5. TESTING LABORATORY SHALL INSPECT HIGH-STRENGTH BOLT TIGHTENING AS REQUIRED BY THE BUILDING CODE.
6. SUBMIT A WRITTEN STATEMENT WITH A COPY DIRECTLY TO THE STRUCTURAL ENGINEER AT THE COMPLETION OF THE PART OF THE PROJECT SUMMARIZING THE TESTS/INSPECTIONS PERFORMED AND THE COMPLIANCE OF THE TEST RESULTS. ITEMS INSPECTED WITH THE SPECIFIED REQUIREMENTS.
7. PROVIDE MANUFACTURERS' STANDARD 10 YEAR WARRANTY ON GALVALUME ROOF PANELS, MANUFACTURER'S 1 YEAR WARRANTY ON STRUCTURAL COMPONENTS, AND ENGINEER'S LETTER OF CERTIFICATION STATING THE ROOF MEETS THE REQUIREMENTS OF A U.L. 90 RATING.
8. FRAMING FABRICATION SHALL BE FABRICATED MEMBERS IN ACCORDANCE WITH AISC SPECIFICATIONS FOR PLATE, BAR, TUBE, OR ROLLED STRUCTURAL SHAPES. FRAMING MEMBER FINISH SHALL BE CLEANED AND SHOP PRIMED.
9. BUILDING FRAMING DETAILS ARE AS SHOWN ON THE GENERALURAL DRAWINGS.
10. FRAME FASTENERS SHALL BE AS REQUIRED BY THE METAL BUILDING MANUFACTURER ENGINEER'S DESIGN REQUIREMENTS. FASTENERS SHALL BE MANUFACTURER'S STANDARD TYPE FINISH TO MATCH ADJACENT SURFACES WHEN EXTERIOR EXPOSED. SELF TAPPING, NON-CORROSIVE TYPE REQUIRED TO MAINTAIN LOAD REQUIREMENTS AND MEET WARRANTY REQUIREMENTS, AND WEATHERTIGHT INSTALLATION; SAME FINISH AS CLADDING. STANDING SEAM ROOF CONCEALED FASTENERS SHALL BE CONCEALED SLIDING CLIPS, WITHIN THE STANDING SEAM, SUITABLE FOR ROOF CONSTRUCTION USING INSULATION BELOW AS SPECIFIED BELOW THE PANEL.
11. ROOF SHEET SHALL BE 24 GAGE MINIMUM METAL THICKNESS GALVALUME PANEL, 20 OR 24 INCH WIDE PANELS, (U.L. 90 RATING IS REQUIRED). REFER TO GENERALURAL ELEVATIONS FOR PANEL PROFILES.
12. WALL SHEET SHALL BE 28 GAGE MINIMUM METAL THICKNESS GALVALUME PANEL. REFER TO GENERALURAL ELEVATIONS FOR PANEL PROFILES.
13. SOFFIT PANEL FASCIA PANEL AND FASCIA BACK PANEL SHALL BE 26 GAGE MINIMUM METAL THICKNESS, GALVALUME FINISH. REFER TO GENERALURAL ELEVATIONS FOR PANEL PROFILES.
14. CLOSURE PIECES SHALL BE MANUFACTURER'S STANDARD, SUCH AS RAKE TRIM, EAVE TRIM, CORNER TRIM, INSIDE CORNER TRIM, HEAD TRIM, JAMB TRIM, BASE TRIM, SOFFIT CAP TRIM, FASCIA CAP AND BASE TRIM EAVE GUTTER AND DOWNSPOUTS, AND ALL OTHER NECESSARY TRIM TO FINISH OUT THE METAL BUILDING SYSTEM. COLOR OF TRIM PIECES SHALL BE SELECTED FROM MANUFACTURER'S STANDARD COLOR. REFER TO GENERALURAL DRAWINGS FOR CLOSURE PIECES SUCH AS RAKE TRIM, EAVE TRIM, ETC.
15. SEALANTS SHALL BE MANUFACTURER'S STANDARD.
16. ROOF JACKS SHALL BE MANUFACTURER'S STANDARD.
17. ANCHOR BOLTS SHALL BE UNPRIMED, ASTM A 193 GRADE B-7 OR ASTM F-1554 GRADE 105 OR EQUIVALENT; DIAMETER, LENGTH, AND QUANTITY AS SPECIFIED BY THE METAL BUILDING ENGINEER.
18. ROOF VENTS SHALL BE FIXED CONTINUOUS TYPE GRAVITY FLOW GALVANIZED STEEL 10' LONG TYPE WITH 1/4 INCH GALVANIZED HARDWARE CLOTH BIRD SCREEN AND 12 INCH THROAT.

C&S COMPANIES®

C&S Engineers, Inc.
1600 Market St.
Suite 3450
Philadelphia, PA 19103
Phone: (215) 709-4340
www.cscos.com

STATE OF NEW JERSEY — JOSEPH D. SAPPLEMAN — No. 24GE04741500 — LICENSED PROFESSIONAL ENGINEER
May 8, 2024

DRBA DELAWARE RIVER & BAY AUTHORITY

WWD HANGAR DESIGN
DELAWARE RIVER AND BAY AUTHORITY
505 FORESTAL ROAD
CAPE MAY, NJ 08242

MARK	DATE	DESCRIPTION

REVISIONS

PROJECT NO:	872.013.088
DATE:	MARCH 2024
DRAWN BY:	S.F. CAPPLEMAN
DESIGNED BY:	S.F. CAPPLEMAN
CHECKED BY:	M.J. BARBER, P.E.

CONTRACTOR SHALL VERIFY ALL CONDITIONS ON JOB SITE & NOTIFY THE OWNER OF ANY VARIATIONS FROM DIMENSIONS SHOWN ON THESE DRAWINGS BEFORE PROCEEDING WITH ANY CONSTRUCTION.

GENERAL NOTES & ABBREVIATIONS

S-001

Copyright ©

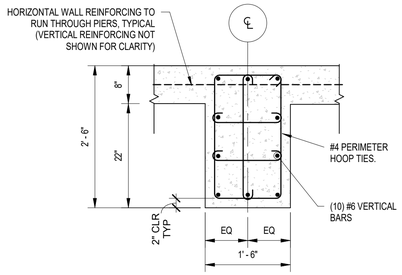

P1

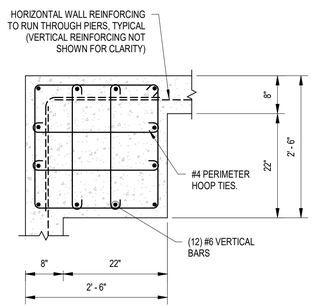

P2

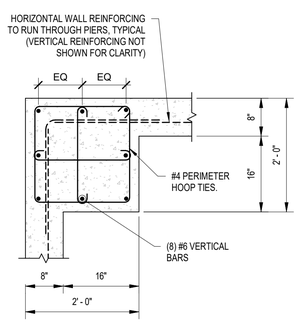

P3

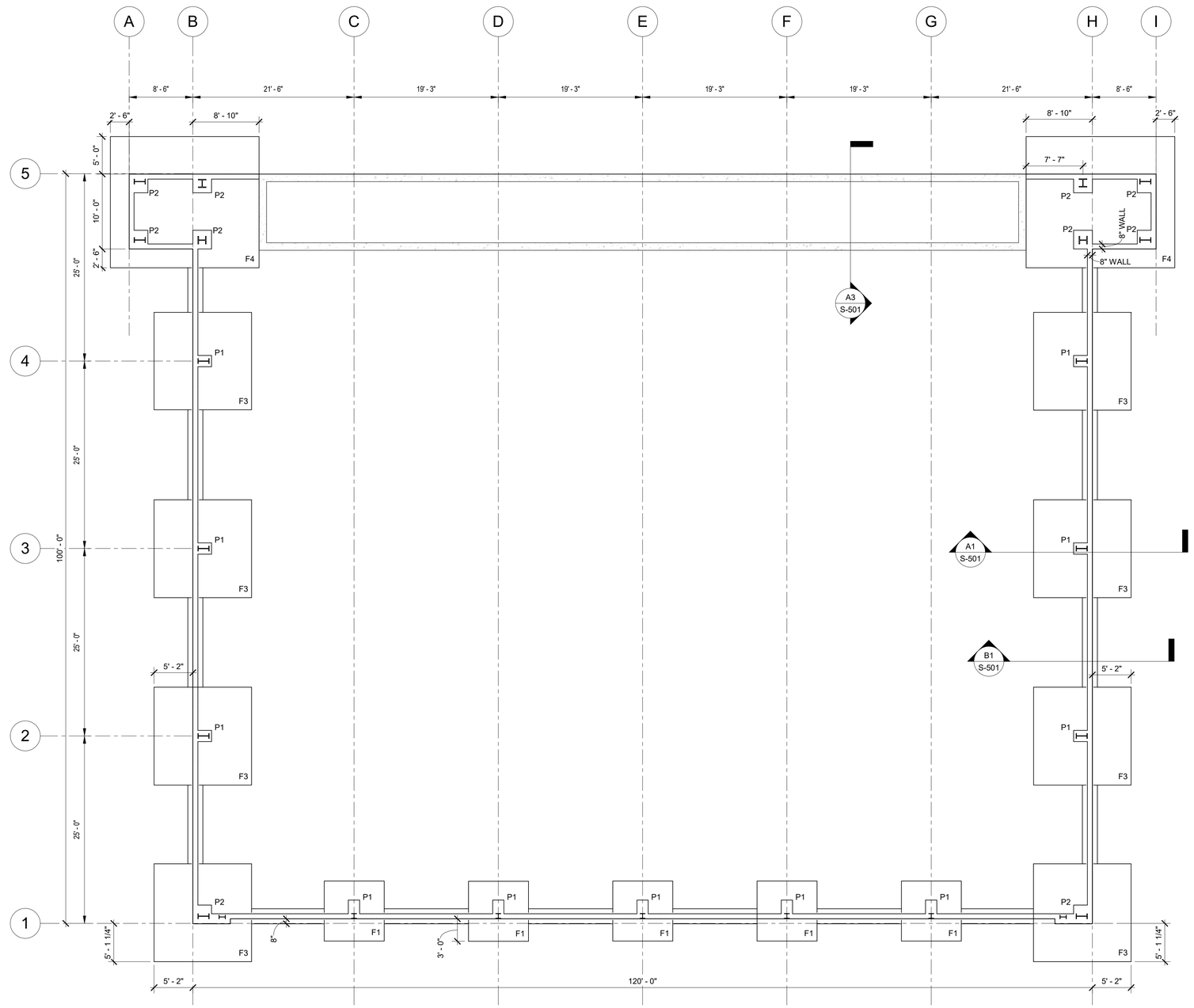

(F) FOOTING SCHEDULE					
MARK	DIMENSIONS			REINFORCING	REMARKS
	"W"	"L"	"H"		
F1	8' - 0"	8' - 0"	2' - 0"	(8) #7 EACH WAY TOP & BOTTOM	---
F3	13' - 0"	13' - 0"	2' - 0"	(13) #7 EACH WAY TOP & BOTTOM	---
F4	17' - 6"	19' - 10"	2' - 4"	#7 @ 12" O.C. EACH WAY TOP & BOTTOM	---

NOTE:
FOUNDATION DESIGN IS FOR BIDDING PURPOSES ONLY. FINAL DESIGN TO BE VERIFIED AFTER REVIEW OF FINAL APPROVED PRE-ENGINEERED METAL BUILDING SHOP DRAWINGS

PLAN NORTH

A1 CONCRETE PIER DETAILS
SCALE: 3/4" = 1'-0"

A2 FOUNDATION PLAN
SCALE: 1/8" = 1'-0"

0 4' 8' 16'

C&S COMPANIES®
C&S Engineers, Inc.
1600 Market St.
Suite 3450
Philadelphia, PA 19103
Phone: (215) 709-4340
www.cscos.com

STATE OF NEW JERSEY
JOSEPH D. NAGOSKY
No. 24GE04741500
LICENSED PROFESSIONAL ENGINEER
May 8, 2024

DRBA
DELAWARE RIVER & BAY AUTHORITY

WWD HANGAR DESIGN
DELAWARE RIVER AND BAY AUTHORITY
505 FORESTAL ROAD
CAPE MAY, NJ 08242

MARK	DATE	DESCRIPTION

REVISIONS

PROJECT NO:	872.013.088
DATE:	MARCH 2024
DRAWN BY:	S.F. CAPPLEMAN
DESIGNED BY:	S.F. CAPPLEMAN
CHECKED BY:	M.J. BARBER, P.E.

CONTRACTOR SHALL VERIFY ALL CONDITIONS ON JOB SITE & NOTIFY THE OWNER OF ANY VARIATIONS FROM DIMENSIONS SHOWN ON THESE DRAWINGS BEFORE PROCEEDING WITH ANY CONSTRUCTION.

STRUCTURAL FOUNDATION PLAN

S-101

Copyright ©

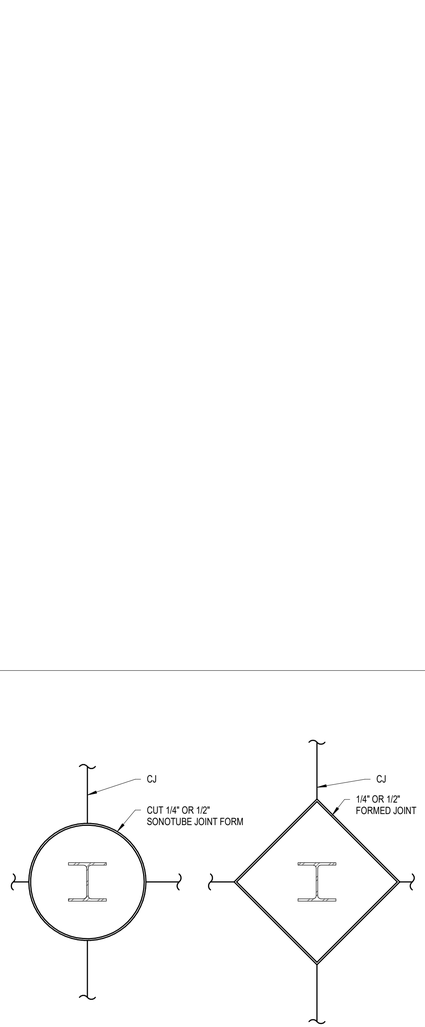

NOTE:

INSTALL JOINT FILLER AND SEALANT IN EXPOSED JOINTS IN ACCORDANCE WITH MANUFACTURER'S RECOMMENDATIONS.

A1 TYPICAL COLUMN ISOLATION JOINT
SCALE: 3/4" = 1'-0"

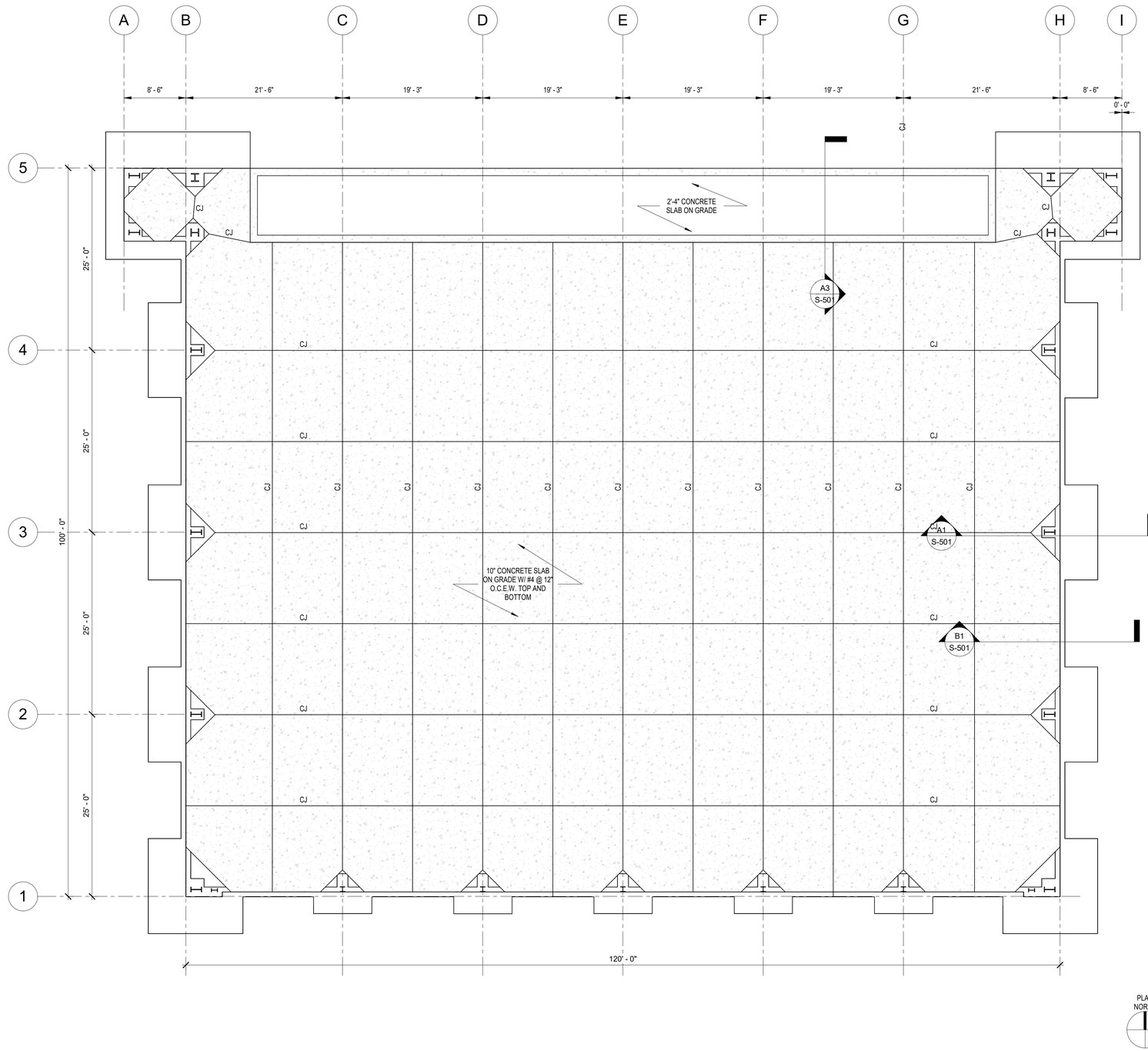

A2 SLAB JOINT PLAN
SCALE: 1/8" = 1'-0"

0 4' 8' 16'

C&S COMPANIES®

C&S Engineers, Inc.
1600 Market St.
Suite 3450
Philadelphia, PA 19103
Phone: (215) 709-4340
www.cscos.com

STATE OF NEW JERSEY
JOSEPH D. NAGGIAR
No. 24GE04741500
LICENSED
PROFESSIONAL ENGINEER
May 8, 2024

DRBA
DELAWARE RIVER & BAY AUTHORITY

WWD HANGAR DESIGN
DELAWARE RIVER AND BAY AUTHORITY
505 FORESTAL ROAD
CAPE MAY, NJ 08242

MARK	DATE	DESCRIPTION

REVISIONS

PROJECT NO:	872.013.088
DATE:	MARCH 2024
DRAWN BY:	S.F. CAPPLEMAN
DESIGNED BY:	S.F. CAPPLEMAN
CHECKED BY:	M.J. BARBER, P.E.

CONTRACTOR SHALL VERIFY ALL CONDITIONS ON JOB SITE & NOTIFY THE OWNER OF ANY VARIATIONS FROM DIMENSIONS SHOWN ON THESE DRAWINGS BEFORE PROCEEDING WITH ANY CONSTRUCTION.

STRUCTURAL SLAB JOINT PLAN

S-102

Copyright ©

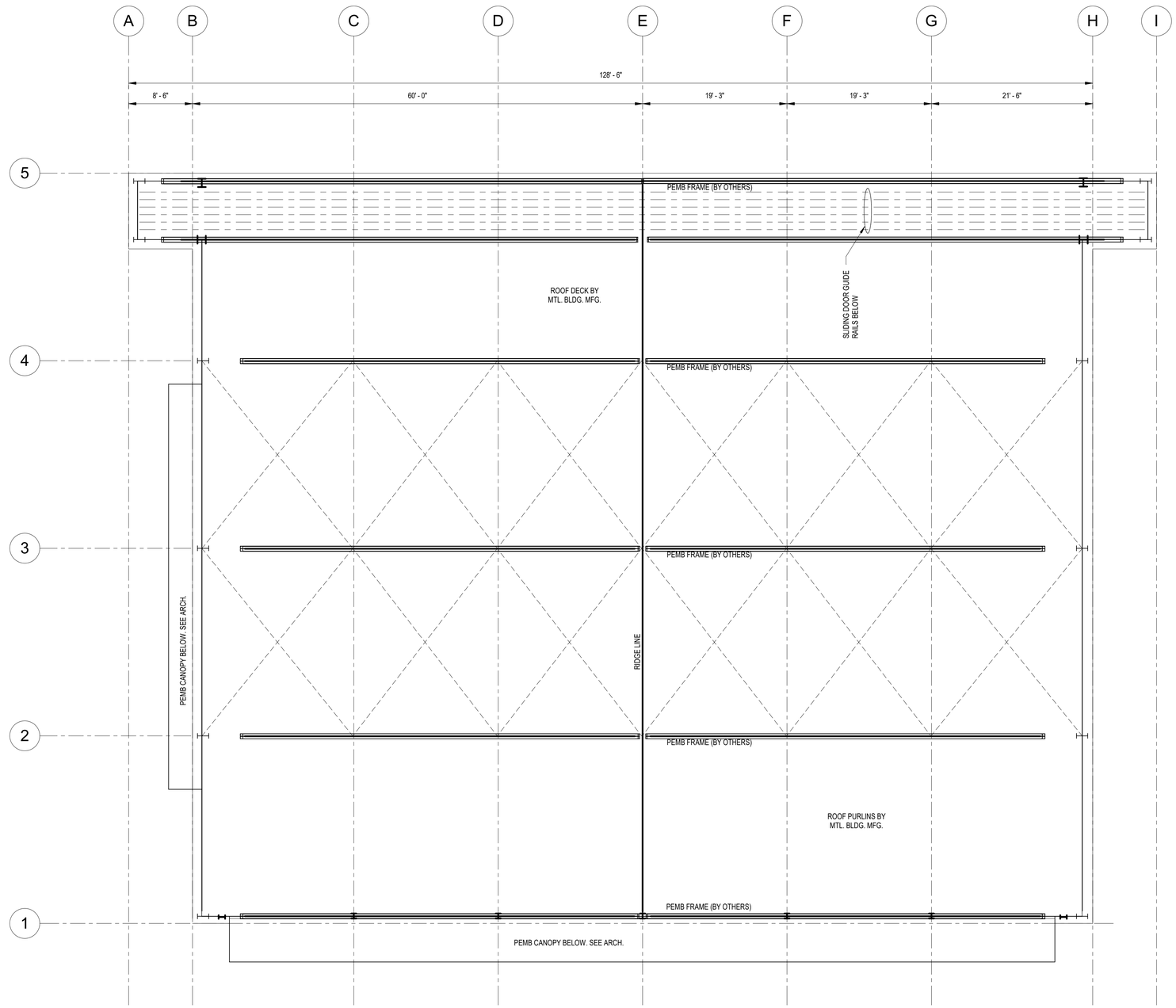

PLAN
NORTH

A2 **ROOF FRAMING PLAN**
SCALE: 1/8" = 1'-0"

0 4' 8' 16'

C&S COMPANIES®

C&S Engineers, Inc.
1600 Market St.
Suite 3450
Philadelphia, PA 19103
Phone: (215) 709-4340
www.cscos.com

STATE OF NEW JERSEY
JOSEPH D. NAGOSKY
No. 24GE04741500
LICENSED
PROFESSIONAL ENGINEER
May 8, 2024

DRBA
DELAWARE RIVER & BAY AUTHORITY

WWD HANGAR DESIGN
DELAWARE RIVER AND BAY AUTHORITY
505 FORESTAL ROAD
CAPE MAY, NJ 08242

MARK	DATE	DESCRIPTION

REVISIONS

PROJECT NO:	872.013.088
DATE:	MARCH 2024
DRAWN BY:	S.F. CAPPLEMAN
DESIGNED BY:	S.F. CAPPLEMAN
CHECKED BY:	M.J. BARBER, P.E.

CONTRACTOR SHALL VERIFY ALL CONDITIONS ON JOB SITE & NOTIFY THE OWNER OF ANY VARIATIONS FROM DIMENSIONS SHOWN ON THESE DRAWINGS BEFORE PROCEEDING WITH ANY CONSTRUCTION.

ROOF FRAMING PLAN

S-103

Copyright ©

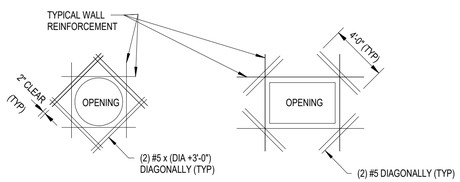

NOTES:

1. FOR WALLS WITH OPENINGS GREATER THAN 6" IN ANY DIRECTION. PLACE BARS AT EACH FACE FOR WALLS WITH (2) LAYERS OF REINFORCING.
2. FOR WALLS WITH REINFORCEMENT LARGER THAN #5 BARS, MATCH WALL REINFORCEMENT BAR SIZE.
3. COORDINATE OPENING SIZES, LOCATIONS, AND INVERTS WITH OTHER DISCIPLINES.

C1 WALL OPENING REINFORCING DETAIL
SCALE: 3/4" = 1'-0"

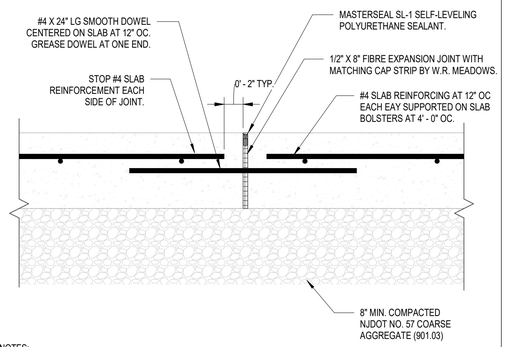

NOTES:

1. CONTRACTOR SHALL SUBMIT PROPOSED SLAB-ON-GRADE POUR SEQUENCE WITH CONSTRUCTION JOINT LAYOUT FOR ENGINEER REVIEW AND APPROVAL.

C2 TYPICAL SLAB-ON-GRADE CONSTRUCTION JOINT DETAIL
SCALE: 1 1/2" = 1'-0"

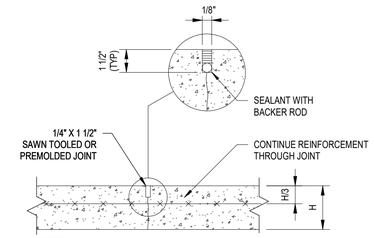

NOTES:
1. JOINT TO BE SAWN WITHIN 24 HOURS AFTER PLACING CONCRETE.
2. PROVIDE CONTROL JOINTS AS SHOWN ON PLAN. FILL JOINT WITH JOINT SEALANT.

C3 TYPICAL SLAB-ON-GRADE CONTROL JOINT DETAIL
SCALE: 3/4" = 1'-0"

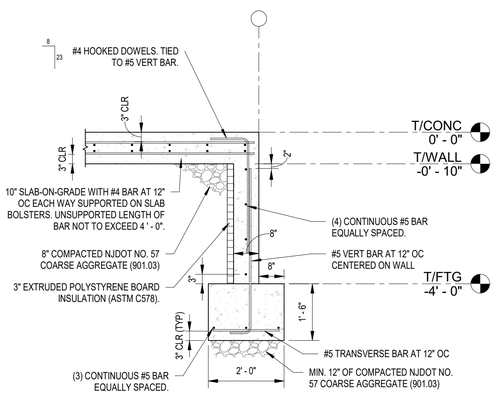

B1 TYPICAL WALL SECTION
SCALE: 1/2" = 1'-0"

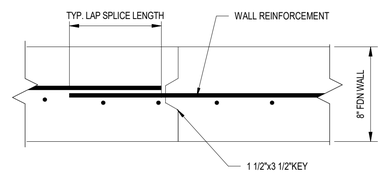

NOTES:

1. LIMIT POUR PLACEMENT LENGTHS TO 60' -0" UNLESS NOTED OTHERWISE.

B2 TYPICAL WALL CONSTRUCTION JOINT DETAIL
SCALE: 1" = 1'-0"

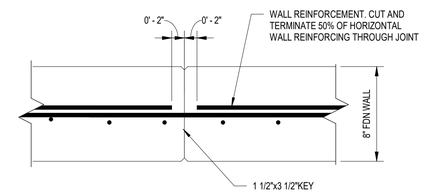

NOTES:

1. PLACE VERTICAL WALL CONTRACTION JOINTS AT 20' - 0" INTERVALS AND WITHIN 10 TO 15 FEET OF CORNERS.

B3 TYPICAL WALL CONTRACTION JOINT DETAIL
SCALE: 1" = 1'-0"

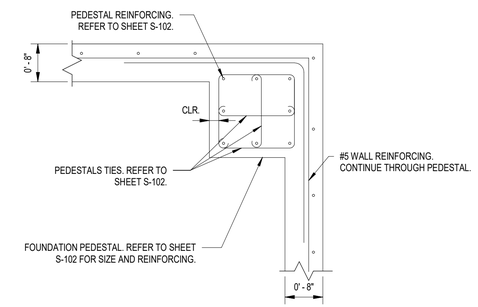

B4 TYPICAL WALL REINFORCING DETAIL AT INTERIOR CORNER
SCALE: 3/4" = 1'-0"

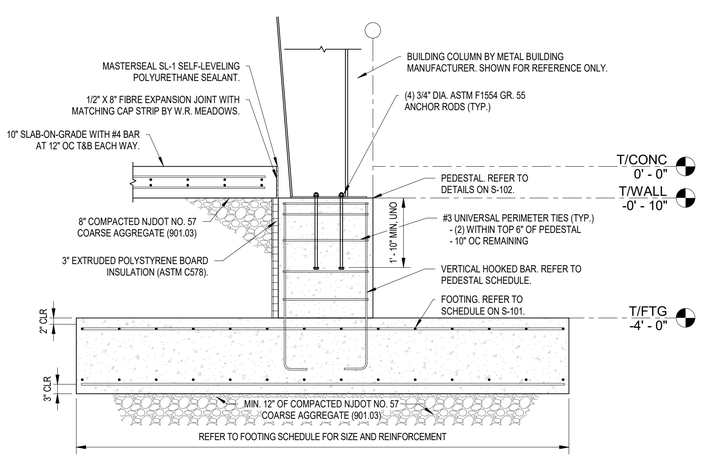

A1 TYPICAL FOOTING SECTION
SCALE: 1/2" = 1'-0"

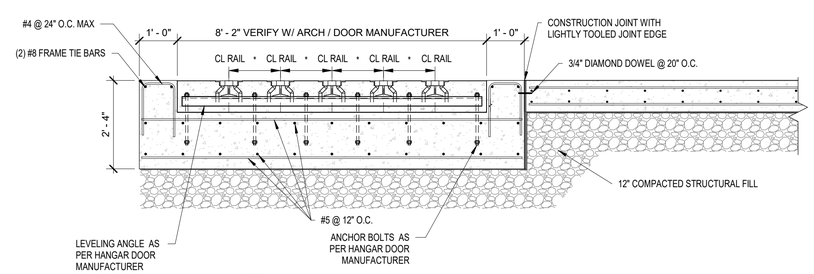

NOTE:

* - CONTRACTOR TO COORDINATE WITH HANGAR DOOR SHOP DRAWINGS FOR DIMENSIONS, DOOR STOPS, RAIL ASSEMBLIES, ANCHOR BOLTS, ETC AND WITH PEMB MANUFACTURER FOR DOOR POCKET CLEARANCES.

A3 SECTION AT HANGAR DOOR
SCALE: 1/2" = 1'-0"

C&S COMPANIES®
C&S Engineers, Inc.
1600 Market St.
Suite 3450
Philadelphia, PA 19103
Phone: (215) 709-4340
www.cscos.com

STATE OF NEW JERSEY — JOSEPH D. NAGGIAR — No. 24GE04741500 — LICENSED PROFESSIONAL ENGINEER
May 8, 2024

DRBA DELAWARE RIVER & BAY AUTHORITY

WWD HANGAR DESIGN
DELAWARE RIVER AND BAY AUTHORITY
505 FORESTAL ROAD
CAPE MAY, NJ 08242

MARK	DATE	DESCRIPTION

REVISIONS

PROJECT NO:	872.013.088
DATE:	MARCH 2024
DRAWN BY:	S.F. CAPPLEMAN
DESIGNED BY:	S.F. CAPPLEMAN
CHECKED BY:	M.J. BARBER, P.E.

CONTRACTOR SHALL VERIFY ALL CONDITIONS ON JOB SITE & NOTIFY THE OWNER OF ANY VARIATIONS FROM DIMENSIONS SHOWN ON THESE DRAWINGS BEFORE PROCEEDING WITH ANY CONSTRUCTION.

TYPICAL DETAILS

S-501

Copyright ©

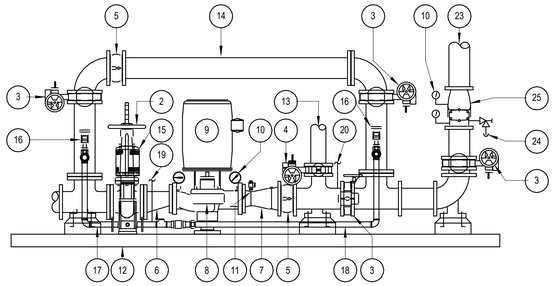

ELECTRIC FIRE PUMP SCHEMATIC ELEVATION
NO SCALE

GENERAL NOTES:

A. USE BASE ELBOWS AND TEES ANCHORED TO CONCRETE BASES.

B. REFER TO ELECTRIC FIRE PUMP KEYED NOTES FOR ITEMS IN THIS DETAIL.

C. DETAIL IS DIAGRAMMATIC ONLY AND IS INTENDED TO SHOW MAJOR COMPONENTS AND GENERAL ARRANGEMENT OF VALVES. ACTUAL FIELD INSTALLATION MAY VARY.

D. ALL POWER SUPPLIES, WIRING, AND CONNECTIONS FOR TAMPER SWITCHES, FLOW SWITCHES AND ELECTRIC ALARM BELLS TO FIRE ALARM SYSTEM SHALL BE BY ELECTRICAL CONTRACTOR.

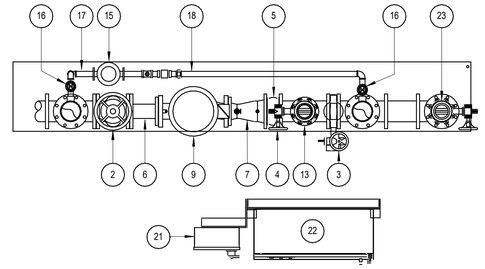

ELECTRIC FIRE PUMP SCHEMATIC PLAN
NO SCALE

GENERAL NOTES:

A. USE BASE ELBOWS & TEES ANCHORED TO CONCRETE PADS.

B. REFER TO ELECTRIC FIRE PUMP KEYED NOTES FOR ITEMS ON THIS PLAN

C. DETAIL IS DIAGRAMMATIC ONLY AND IS INTENDED TO SHOW MAJOR COMPONENTS AND GENERAL ARRANGEMENT OF VALVES. ACTUAL FIELD INSTALLATION MAY VARY.

D. ALL POWER SUPPLIES, WIRING, AND CONNECTIONS FOR TAMPER SWITCHES, FLOW SWITCHES AND ELECTRIC ALARM BELLS TO FIRE ALARM SYSTEM SHALL BE BY ELECTRIC CONTRACTOR.

1. FROM FIRE PROTECTION WATER SUPPLY
2. OS&Y GATE VALVE WITH TAMPER SWITCH, LOCK & CHAIN (NORMALLY OPEN)
3. BUTTERFLY VALVE WITH TAMPER SWITCH, LOCK & CHAIN (NORMALLY OPEN)
4. PUMP TEST BUTTERFLY VALVE WITH TAMPER SWITCH, LOCK & CHAIN (NORMALLY CLOSED)
5. CHECK VALVE
6. ECCENTRIC REDUCER
7. CONCENTRIC INCREASER
8. VERTICAL IN-LINE FIRE PUMP; 90 PSI @ 500 GPM
9. ELECTRIC MOTOR; 50 HP @ 3550 RPM
10. PRESSURE GAUGE
11. 3/4" STD. RELIEF VALVE
12. REINFORCED CONCRETE PUMP PAD
13. TO FIRE PUMP TEST HEADER; FLUSH MOUNT WITH (2) 2-1/2" VALVES PER NFPA 20
14. FIRE PUMP BYPASS
15. ELECTRIC JOCKEY PUMP; 70PSI @ 5GPM
16. OS&Y GATE VALVE (NORMALLY OPEN)
17. JOCKEY PUMP SUCTION PIPING
18. JOCKEY PUMP DISCHARGE PIPING
19. JOCKEY PUMP PRESSURE SENSING LINE
20. FIRE PUMP PRESSURE SENSING LINE
21. JOCKEY PUMP CONTROLLER
22. FIRE PUMP CONTROLLER WITH TRANSFER SWITCH
23. TO FIRE PROTECTION SYSTEM
24. 2" MAIN DRAIN. DISCHARGE TO NEAREST FLOOR DRAIN
25. 4" RISER CHECK VALVE
26. 4" DOUBLE CHECK BACKFLOW PREVENTER

C1 VERTICAL ELECTRIC PUMP DETAIL
SCALE: NOT TO SCALE

SCOPE OF WORK:

THE SCOPE OF WORK SHALL INCLUDE THE FOLLOWING:

1. THE LAYOUT, INSTALLATION, AND TESTING OF NEW FIRE PROTECTION, AUTOMATIC WET-PIPE SPRINKLER SYSTEMS THROUGHOUT THE GROUP III HANGAR.
2. SUBMISSION OF DOCUMENTATION AS REQUIRED.

APPLICABLE CODES:

1. 2021 NEW JERSEY BUILDING CODE.
2. 2021 NEW JERSEY FIRE CODE.
3. NFPA 13 - 2019, STANDARD FOR THE INSTALLATION OF SPRINKLER SYSTEMS.
4. NFPA 20 - 2019, STANDARD FOR THE INSTALLATION OF STATIONARY PUMPS FOR FIRE PROTECTION.
5. NFPA 409 - 2016, STANDARD ON AIRCRAFT HANGARS.

DESIGN CRITERIA:

1. THE DESIGN DOCUMENTS PROVIDED HEREIN IDENTIFY THE MINIMUM SYSTEM REQUIREMENTS, IN ACCORDANCE WITH THE ABOVE REFERENCED CODES AND REGULATIONS.
2. PROVIDE A COMPLETE AUTOMATIC WET-PIPE SPRINKLER SYSTEM FOR AREAS INDICATED. ALL WORK SHALL BE COMPLETED IN ACCORDANCE WITH NFPA 13. REFER TO DIVISION 21 SPECIFICATIONS FOR ADDITIONAL INFORMATION AND REQUIREMENTS.
   A. GROUP III AIRCRAFT HANGAR SPACES: EXTRA HAZARD GROUP I, QUICK RESPONSE SPRINKLERS WITH K-FACTOR OF 5.6 OR 8.0 AND TEMPERATURE RATING OF 325 °F TO 375 °F, 0.30 GPM/SQ.FT. OVER 2500 SQ.FT., 500 GPM HOSE STREAM, 100 SQ.FT. MAXIMUM AREA OF COVERAGE.
   B. FIRE PUMP ROOM: ORDINARY HAZARD GROUP I, QUICK RESPONSE SPRINKLERS, 0.15 GPM/SQ.FT OVER 1,500 SQ.FT., 250 GPM HOSE STREAM.
3. PERFORM AND DOCUMENT WATER FLOW TEST IN ACCORDANCE WITH NFPA 291. SEE CIVIL DRAWINGS FOR LOCATION OF WATER MAIN AND INFORMATION ON PUBLIC WATER SUPPLY CHARACTERISTICS.
4. PIPING SHOWN IS DIAGRAMMATIC IN NATURE. CONTRACTOR IS RESPONSIBLE FOR FINAL SPRINKLER SYSTEM PIPE LAYOUT AND SIZING HYDRAULIC CALCULATIONS, AND COORDINATION WITH OTHER TRADES.
5. PROVIDE MINIMUM 10 PSI HYDRAULIC SAFETY FACTOR.
6. CONTRACTOR SHALL SUBMIT FOR REVIEW TO THE ENGINEER OF RECORD (THROUGH THE APPROPRIATE PARTIES) COMPLETE SHOP DRAWINGS OF THE FIRE SPRINKLER SYSTEMS, MATERIAL DATA, AND CALCULATIONS AT THE SAME TIME. INCOMPLETE SUBMITTALS WILL BE RETURNED WITHOUT REVIEW. SHOP DRAWINGS SHALL INCLUDE, AT MINIMUM, WORKING PLANS WITH HYDRAULIC CALCULATIONS; AND COORDINATION WITH OTHER TRADES.

GENERAL NOTES:

1. ALL SPRINKLER AND SYSTEM COMPONENTS SHALL COMPLY WITH THE LISTING AND/OR PERFORMANCE REQUIREMENTS OF NFPA 13.
2. INSTALLATION PERSONNEL SHALL BE SUPERVISED BY PERSONS WHO ARE QUALIFIED AND EXPERIENCED IN THE INSTALLATION, INSPECTION, AND TESTING OF FIRE SPRINKLER SYSTEMS.
3. COORDINATE SPRINKLERS WITH ALL OTHER TRADES TO AVOID CONFLICTS. (SUCH AS LIGHTS, CEILING FANS, HVAC DUCTS AND GRILLS, ETC.).
4. ALL PIPING SHALL BE BLACK STEEL.
5. PIPING SHALL BE INSTALLED CONCEALED ABOVE FINISHED CEILINGS UNLESS NOTED OTHERWISE.
6. PIPING SHALL BE INSTALLED EXPOSED IN UNFINISHED CEILING AREAS UNLESS NOTED OTHERWISE. LOCATE PIPING TIGHT TO STRUCTURE AND ABOVE OTHER SYSTEMS WHERE POSSIBLE. ALL EXPOSED PIPING IN FINISHED ROOM AREAS ARE SUBJECT TO OWNER'S REPRESENTATIVE'S REVIEW.
7. SPRINKLER VALVE TAMPER SWITCHES AND WATER FLOW SWITCHES SHALL BE PROVIDED BY FIRE SUPPRESSION CONTRACTOR. FIRE ALARM CONTRACTOR SHALL PROVIDE, INSTALL, WIRE, AND PROGRAM MONITOR MODULES.
8. PROVIDE AIR RELIEF DEVICE NEAR SYSTEM HIGHPOINT IN ACCORDANCE WITH NFPA 13.
9. PROVIDE LOW-POINT DRAINS WHERE WATER IS TRAPPED IN ACCORDANCE WITH NFPA 13.

B4 FIRE PROTECTION GENERAL NOTES
SCALE: NOT TO SCALE

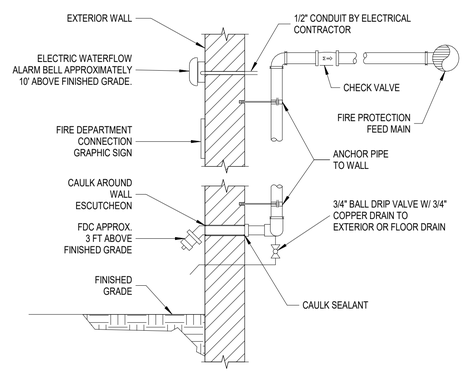

B2 FIRE DEPARTMENT CONNECTION DETAIL
SCALE: NOT TO SCALE

HANGER SPACING CHART	
PIPE SIZE	MAXIMUM HANGER SPACING
1 1/4" OR SMALLER	8'-0"
1 1/2" TO 3"	10'-0"
4" TO 5"	12'-0"
6" OR LARGER	15'-0"

ROD SIZE CHART	
PIPE SIZE	ROD SIZE
4" OR SMALLER	3/8"
5", 6" OR 8"	1/2"
10" & 12"	5/8"

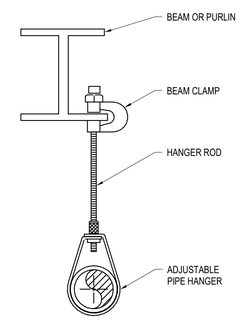

B3 BEAM CLAMP PIPE HANGER DETAIL
SCALE: NOT TO SCALE

DATE AND TIME:	10/12/2023 AT 8:00 AM
PERFORMED BY:	HARRING FIRE PROTECTION OF NJ
LOCATION:	507 TERMINAL DRIVE RIO GRANDE, NJ 08242
CROSS STREET OR INTERSECTION:	HORNET ROAD
MAIN SIZE:	6 INCH
STATIC:	57 PSI
RESIDUAL:	50 PSI
FLOW:	754 GPM

A1 WATER SUPPLY INFORMATION
SCALE: NOT TO SCALE

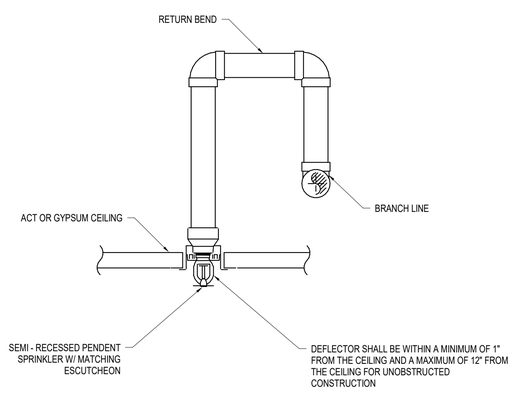

A2 SEMI RECESSED PENDENT SPRINKLER DETAIL
SCALE: NOT TO SCALE

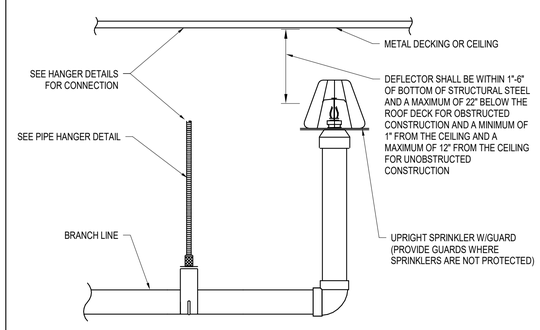

A3 UPRIGHT SPRINKLER DETAIL
SCALE: NOT TO SCALE

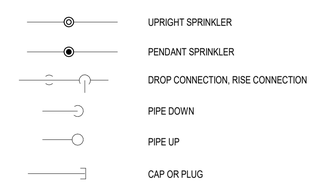

A4 FIRE PROTECTION SYMBOL LIST
SCALE: NOT TO SCALE

C&S COMPANIES®
C&S Engineers, Inc.
1600 Market St.
Suite 3450
Philadelphia, PA 19103
Phone: (215) 709-4340
www.cscos.com

STATE OF NEW JERSEY
FRANCESCA K. WILEY
No. GE60319
LICENSED PROFESSIONAL ENGINEER
May 8, 2024

DRBA
DELAWARE RIVER & BAY AUTHORITY

WWD HANGAR DESIGN
DELAWARE RIVER AND BAY AUTHORITY
505 FORESTAL ROAD
CAPE MAY, NJ 08242

MARK	DATE	DESCRIPTION

REVISIONS

PROJECT NO:	872.013.088
DATE:	MARCH 2024
DRAWN BY:	V. ZAWACKI
DESIGNED BY:	V. ZAWACKI
CHECKED BY:	B. DONNER

CONTRACTOR SHALL VERIFY ALL CONDITIONS ON JOB SITE & NOTIFY THE OWNER OF ANY VARIATIONS FROM DIMENSIONS SHOWN ON THESE DRAWINGS BEFORE PROCEEDING WITH ANY CONSTRUCTION.

SYMBOL LIST, ABBREVIATIONS, AND NOTES

FP-001

Copyright ©

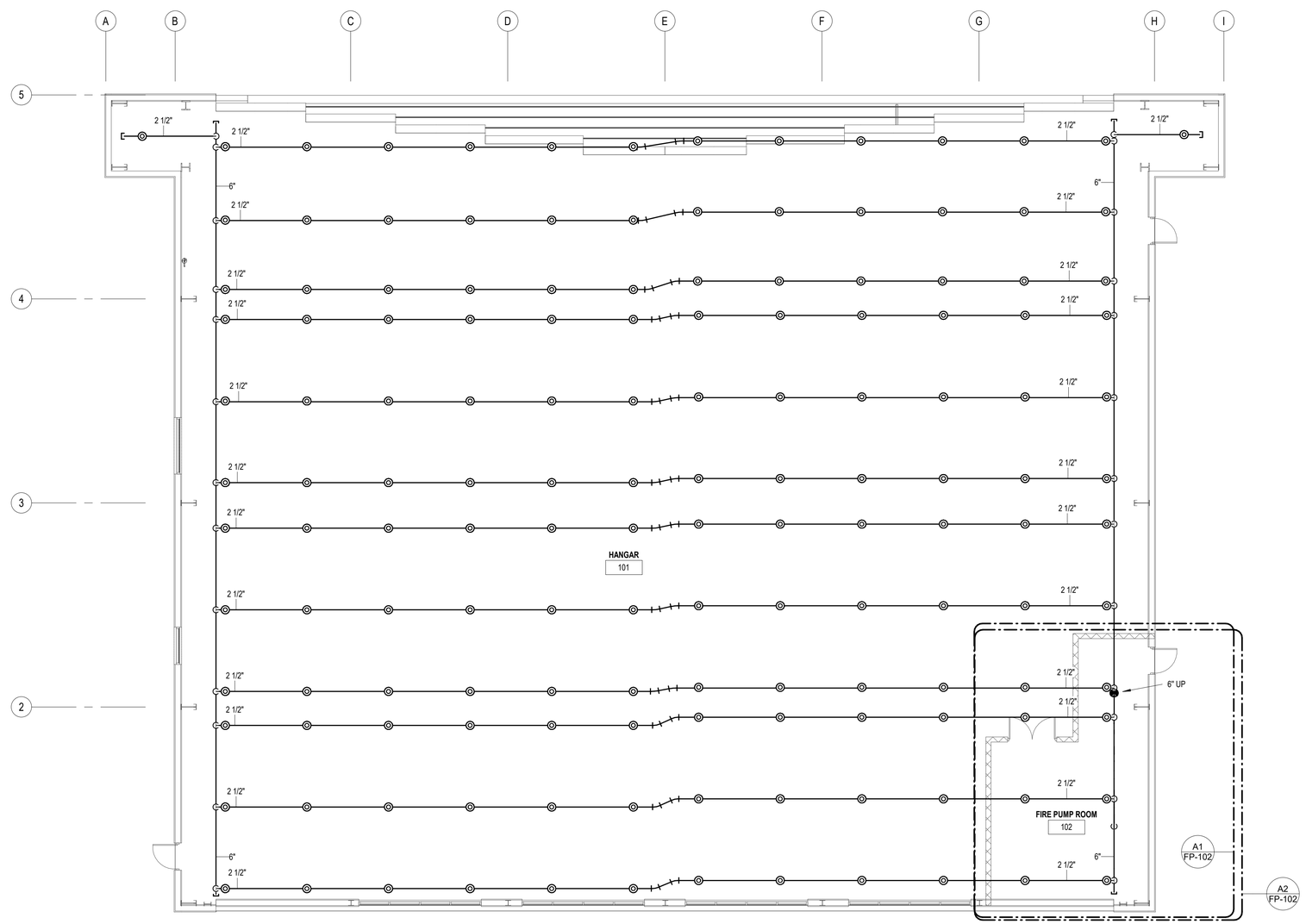

PLAN NORTH

A1 SPRINKLER FLOOR PLAN
SCALE: 1/8" = 1'-0"

0 4' 8' 16'

C&S COMPANIES®

C&S Engineers, Inc.
1600 Market St.
Suite 3450
Philadelphia, PA 19103
Phone: (215) 709-4340
www.cscos.com

STATE OF NEW JERSEY
FRANCESCA K. KELLEY
No. GE60319
LICENSED PROFESSIONAL ENGINEER
May 8, 2024

DRBA
DELAWARE RIVER & BAY AUTHORITY

WWD HANGAR DESIGN
DELAWARE RIVER AND BAY AUTHORITY
505 FORESTAL ROAD
CAPE MAY, NJ 08242

MARK	DATE	DESCRIPTION

REVISIONS

PROJECT NO:	872.013.088
DATE:	MARCH 2024
DRAWN BY:	V. ZAWACKI
DESIGNED BY:	V. ZAWACKI
CHECKED BY:	B. DONNER

CONTRACTOR SHALL VERIFY ALL CONDITIONS ON JOB SITE & NOTIFY THE OWNER OF ANY VARIATIONS FROM DIMENSIONS SHOWN ON THESE DRAWINGS BEFORE PROCEEDING WITH ANY CONSTRUCTION.

SPRINKLER FLOOR PLAN

FP-101

Copyright ©

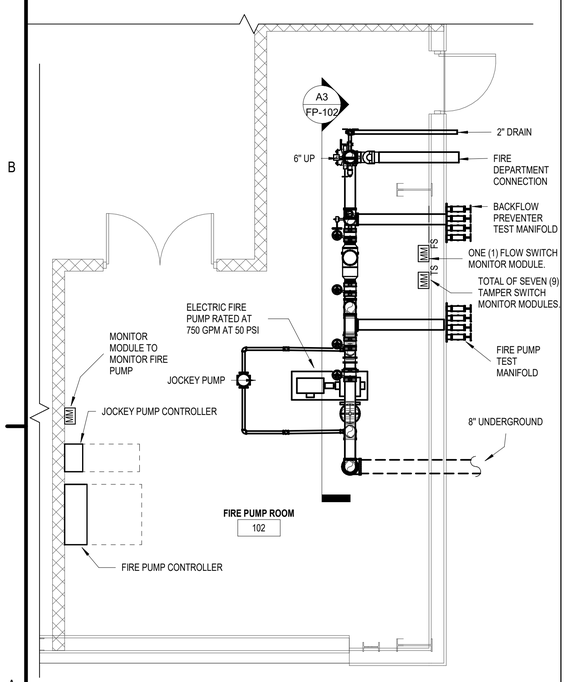

A1 FIRE PUMP ROOM LAYOUT
SCALE: 1/4" = 1'-0"

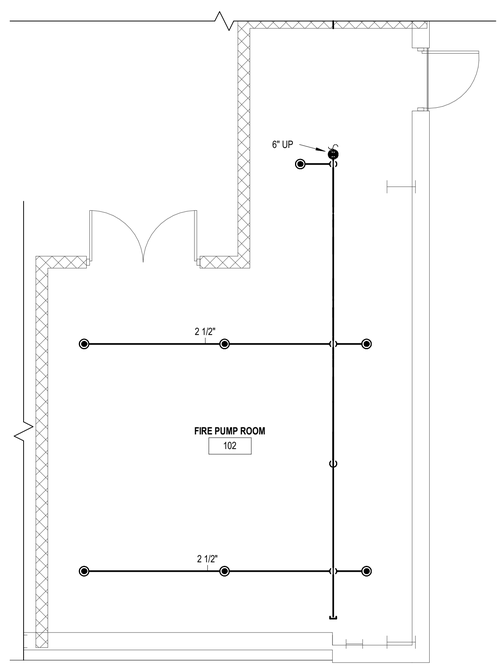

A2 FIRE PUMP ROOM SPRINKLER
SCALE: 1/4" = 1'-0"

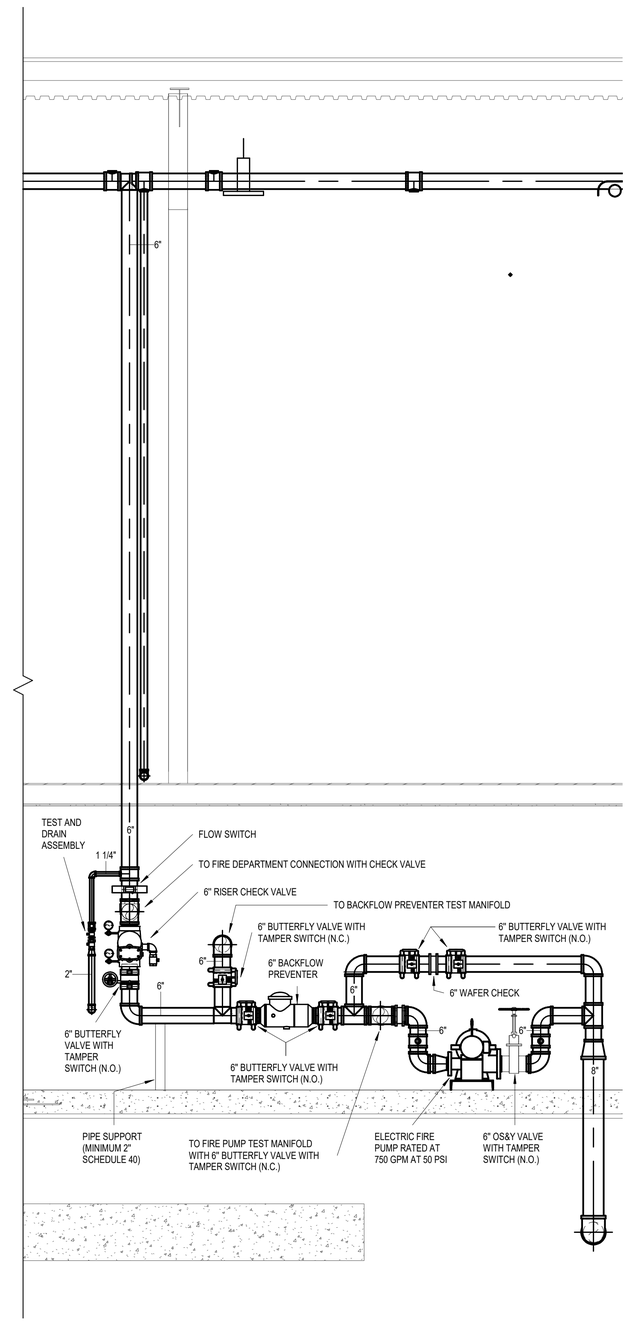

A3 RISER ELEVATION
SCALE: 3/8" = 1'-0"

C&S COMPANIES®
C&S Engineers, Inc.
1600 Market St.
Suite 3450
Philadelphia, PA 19103
Phone: (215) 709-4340
www.cscos.com

STATE OF NEW JERSEY
FRANCESCA K. NUTTI
No. GE60319
LICENSED PROFESSIONAL ENGINEER
May 8, 2024

DRBA
DELAWARE RIVER & BAY AUTHORITY

WWD HANGAR DESIGN
DELAWARE RIVER AND BAY AUTHORITY
505 FORESTAL ROAD
CAPE MAY, NJ 08242

MARK	DATE	DESCRIPTION

REVISIONS

PROJECT NO:	872.013.088
DATE:	MARCH 2024
DRAWN BY:	V. ZAWACKI
DESIGNED BY:	V. ZAWACKI
CHECKED BY:	B. DONNER

CONTRACTOR SHALL VERIFY ALL CONDITIONS ON JOB SITE & NOTIFY THE OWNER OF ANY VARIATIONS FROM DIMENSIONS SHOWN ON THESE DRAWINGS BEFORE PROCEEDING WITH ANY CONSTRUCTION.

FIRE PUMP ROOM LAYOUT AND ELEVATION

FP-102

Copyright ©

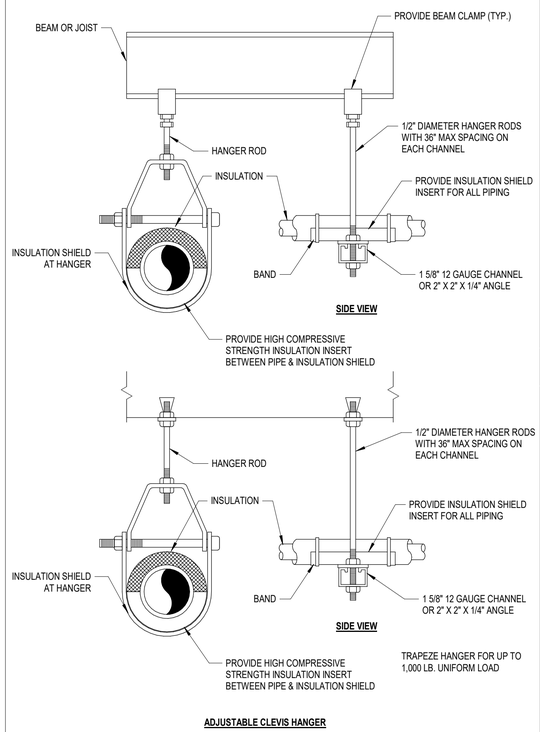

B2 TYPICAL PIPE HANGER

SCALE: NOT TO SCALE

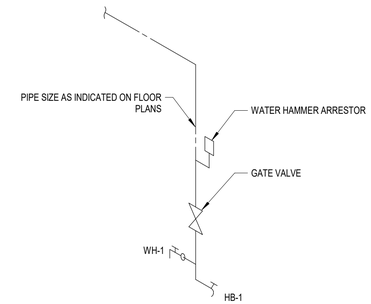

C3 TYPICAL HOSE DROP

SCALE: NOT TO SCALE

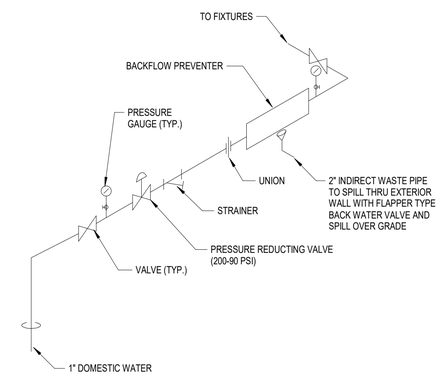

B3 DOMESTIC WATER SERVICE

SCALE: NOT TO SCALE

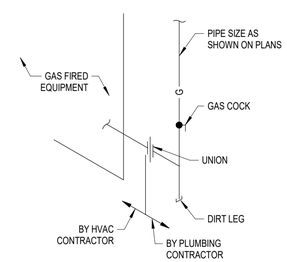

A3 TYPICAL GAS CONNECTION DETAIL

SCALE: NOT TO SCALE

APPLICABLE CODES & STANDARDS

A. ALL WORK OF THIS CONTRACT SHALL COMPLY WITH THE FOLLOWING CODES & STANDARDS. WHERE CONFLICTING DIRECTION AND/OR INFORMATION EXISTS, CONTRACTOR SHALL FOLLOW THE MOST STRINGENT
   1. NEW JERSEY PLUMBING CODE, 2021 EDITION
   2. AMERICAN SOCIETY OF PLUMBING ENGINEERS STANDARD PRACTICES

GENERAL PLUMBING NOTES

A. ALL PIPE DIMENSIONS SHOWN ARE NOMINAL

B. CONTRACTOR SHALL FIELD-VERIFY ALL EXISTING CONDITIONS AND PIPE LOCATIONS PRIOR TO START OF THIS WORK. CONTRACTOR SHALL NOTIFY ENGINEER OF RECORD WITH ANY DISCREPANCIES FOUND IN THE FIELD

C. CONTRACTOR SHALL PERFORM ALL CUTTING AND PATCHING REQUIRED TO INCORPORATE THE SCOPE HEREIN, UNLESS NOTED OR SHOWN OTHERWISE

D. ALL ITEMS WHETHER SCHEDULED OR NOT, SHALL BE INSTALLED IN ACCORDANCE WITH MANUFACTURER'S WRITTEN INSTRUCTIONS IN CONJUNCTION WITH INDUSTRY STANDARD PRACTICES, CONSISTENT WITH THE CODES REFERENCED ABOVE

E. CONTRACTOR SHALL PROVIDE AND INSTALL ALL SUPPORTS, HANGERS, BRACES, STRUTS, ETC WHETHER SHOWN OR NOT TO PROVIDE A COMPLETE, SAFE, AND DURABLE SYSTEM

F. CONTRACTOR SHALL COORDINATE THE WORK OF THIS CONTRACT WITH THAT OF OTHER TRADES AND EXISTING CONDITIONS ENCOUNTERED ONSITE

G. PIPE ROUTING & SPECIALTIES ARE DIAGRAMMATIC IN NATURE AND ARE NOT INTENDED TO SHOW EVERY RISE, DROP, TRANSITION, OR FITTING. THESE DRAWINGS ARE PROVIDED TO CONVEY DESIGN INTENT AND THE CONTRACTOR SHALL COORDINATE ALL FITTINGS, ELEVATION CHANGES, TRANSITIONS, ETC TO AVOID CONFLICT WITH THE WORK OF OTHER TRADES AND EXISTING CONDITIONS ENCOUNTERED ONSITE

C4 PLUMBING GENERAL NOTES

SCALE: NOT TO SCALE

DCW	DOMESTIC COLD WATER (DCW)
G	NATURAL GAS (G)
	PIPING BELOW SLAB (ALL SYSTEMS)

B4 PIPE LEGEND

SCALE: NOT TO SCALE

	CHECK VALVE		PIPE DOWN
	CONNECT TO EXISTING		PIPE UP
	HOSE BIB (HB) / WALL HYDRANT (WH)		BACKFLOW PREVENTER
	ISOLATION VALVE		TEE DOWN
	PIPE BREAK/CONTINUATION		TEE UP
	PRESSURE REDUCING VALVE		UNION

A4 PLUMBING SYMBOL LEGEND

SCALE: NOT TO SCALE

C&S COMPANIES®
C&S Engineers, Inc.
1600 Market St.
Suite 3450
Philadelphia, PA 19103
Phone: (215) 709-4340
www.cscos.com

STATE OF NEW JERSEY
FRANCESCA K. NEELY
No. GE60319
LICENSED PROFESSIONAL ENGINEER
May 8, 2024

DRBA
DELAWARE RIVER & BAY AUTHORITY

WWD HANGAR DESIGN
DELAWARE RIVER AND BAY AUTHORITY
505 FORESTAL ROAD
CAPE MAY, NJ 08242

MARK	DATE	DESCRIPTION

REVISIONS

PROJECT NO:	872.013.088
DATE:	MARCH 2024
DRAWN BY:	E. LUKOWSKI
DESIGNED BY:	E. LUKOWSKI
CHECKED BY:	D. CHAMBERS

CONTRACTOR SHALL VERIFY ALL CONDITIONS ON JOB SITE & NOTIFY THE OWNER OF ANY VARIATIONS FROM DIMENSIONS SHOWN ON THESE DRAWINGS BEFORE PROCEEDING WITH ANY CONSTRUCTION.

PLUMBING GENERAL NOTES, DETAILS & SCHEDULES

P-001

Copyright ©

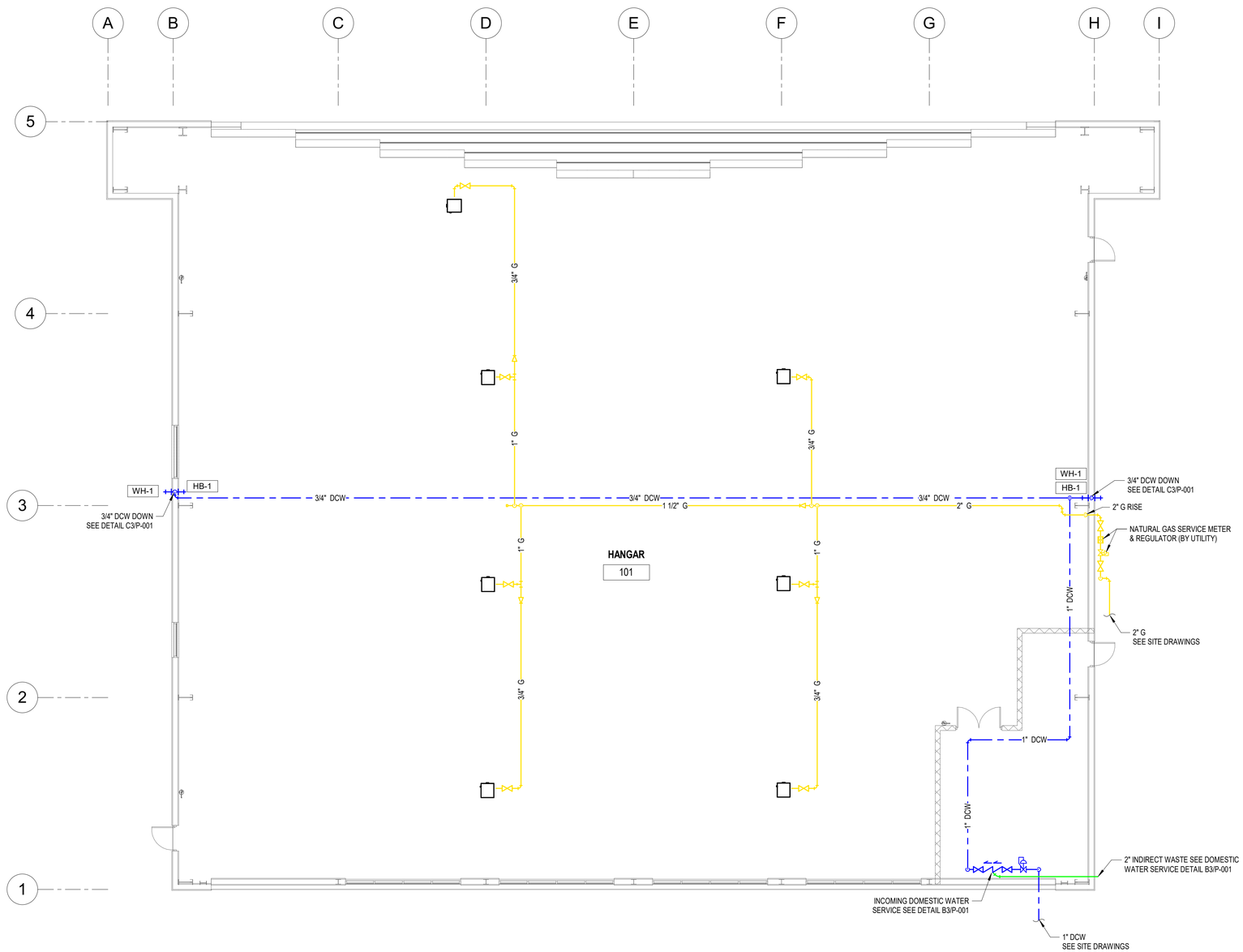

A1 PLUMBING PLAN
SCALE: 1/8" = 1'-0"

0 4' 8' 16'

C&S COMPANIES®
C&S Engineers, Inc.
1600 Market St.
Suite 3450
Philadelphia, PA 19103
Phone: (215) 709-4340
www.cscos.com

STATE OF NEW JERSEY
FRANCESCA K. NEILY
No. GE60319
LICENSED PROFESSIONAL ENGINEER
May 8, 2024

DRBA
DELAWARE RIVER & BAY AUTHORITY

WWD HANGAR DESIGN
DELAWARE RIVER AND BAY AUTHORITY
505 FORESTAL ROAD
CAPE MAY, NJ 08242

MARK	DATE	DESCRIPTION

REVISIONS

PROJECT NO:	872.013.088
DATE:	MARCH 2024
DRAWN BY:	E. LUKOWSKI
DESIGNED BY:	E. LUKOWSKI
CHECKED BY:	D. CHAMBERS

CONTRACTOR SHALL VERIFY ALL CONDITIONS ON JOB SITE & NOTIFY THE OWNER OF ANY VARIATIONS FROM DIMENSIONS SHOWN ON THESE DRAWINGS BEFORE PROCEEDING WITH ANY CONSTRUCTION.

PLUMBING PLAN

P-101

Copyright ©

ABBREVIATIONS

AMP	AMPERES	DTR	DUAL TEMPERATURE WATER RETURN	HPS	HIGH PRESSURE STEAM	RAD	RADIATOR, RADIANT PANEL
AAD	AUTOMATIC AIR DAMPER	DTS	DUAL TEMPERATURE WATER SUPPLY	HR	HUMIDITY RATIO, HOUR	RCP	RADIANT CEILING PANEL
ACCU	AIR COOLED CONDENSING UNIT	DWH	DOMESTIC WATER HEATER	HRU	HEAT RECOVERY UNIT	RH	RELATIVE HUMIDITY
ACU	AIR CONDITIONING UNIT	DX	DIRECT EXPANSION	HUM	HUMIDIFIER	RHC	REHEAT COIL
ACV	AIR CONTROL VALVE	EAT	ENTERING AIR TEMPERATURE	HWC	HOT WATER COIL	RPM	REVOLUTION PER MINUTE
AFF	ABOVE FINISHED FLOOR	EBB	ELECTRIC BASE BOARD	HWS	HOT WATER SUPPLY	RTH	RADIANT TUBE HEATER
AHU	AIR HANDLING UNIT	EC	EXPANSION COMPENSATOR	HWR	HOT WATER RETURN	RTU	ROOF TOP UNIT
APD	AIR PRESSURE DROP	EDB	ENTERING DRY BULB TEMPERATURE	HX	HEAT EXCHANGER	SA	SUPPLY AIR
AS	AIR SEPARATOR	EFF	EFFICIENCY	HZ	HERTZ	SS	SOLIDS SEPARATOR
B	BOILER	ENC	ENCLOSURE	IN	INCH	SD	SMOKE DAMPER
BD	BYPASS DAMPER	ERU	ENERGY RECOVERY UNIT	IR	INFRARED HEATER	SHC	SENSIBLE HEAT CAPACITY
BDD	BACK DRAFT DAMPER	ESP	EXTERNAL STATIC PRESSURE	KH	KILN HOOD	SP	STATIC PRESSURE
BHP	BRAKE HORSE POWER	ET	EXPANSION TANK	KW	KILOWATT	SQ	SQUARE
BOD	BOTTOM OF DUCT	EWB	ENTERING WET BULB TEMPERATURE	LAT	LEAVING AIR TEMPERATURE	SRV	STATIONARY ROOF VENT
BTU	BRITISH THERMAL UNIT	EWT	ENTERING WATER TEMPERATURE	LB	POUND	TD	TRIPLE DUTY VALVE
BTUH	BRITISH THERMAL UNIT PER HOUR	EXH	EXHAUST AIR	LDB	LEAVING DRY BULB TEMPERATURE	TDH	TOTAL DYNAMIC HEAD
C	COMMON	EXIST	EXISTING	LPC	LOW PRESSURE CONDENSATE	TG	TRANSFER GRILLE
CCU	CEILING CASSETTE UNIT	F	FAN	LPS	LOW PRESSURE STEAM	THC	TOTAL HEAT CAPACITY
CD	COLD CONDENSATE DRAIN	°F	FAHRENHEIT	LV	LOUVER	TSP	TOTAL STATIC PRESSURE
CDWS	CONDENSER WATER SUPPLY	F&T	FLOAT AND THERMOSTATIC TRAP	LWB	LEAVING WET BULB	TYP	TYPICAL
CDWR	CONDENSER WATER RETURN	FC	FLEXIBLE CONNECTION	LWT	LEAVING WATER TEMPERATURE	UV	UNIT VENTILATOR
CFM	CUBIC FEET PER MINUTE	FCU	FAN COIL UNIT	MAX	MAXIMUM	V	VOLT
CH	CHILLER	FD	FIRE DAMPER	MAU	MAKEUP AIR UNIT	VAL	VALANCE UNIT
CGR	CHILLED GLYCOL RETURN	FIL	FILTER	MBH	1000 BTUH	VAV	VARIABLE AIR VOLUME
CGS	CHILLED GLYCOL SUPPLY	FSD	COMBINATION FIRE/SMOKE DAMPER	MCA	MINIMUM CIRCUIT AMPACITY	VD	VOLUME DAMPER
CWS	CHILLED WATER SUPPLY	FMS	FLOW MEASURING STATION	MIN	MINIMUM	VIF	VERIFY IN FIELD
CWR	CHILLED WATER RETURN	FPM	FEET PER MINUTE	MOP	MAXIMUM OVERCURRENT PROTECTION	VP	VACUUM PUMP
CO	CLEANOUT	FR	FURNACE	MV	MANUAL VENT	VSD	VARIABLE SPEED DRIVE
CONV	CONVECTOR	FT	FEET	NC	NORMALLY CLOSED	VUV	VERTICAL UNIT VENTILATOR
CP	CONDENSATE PUMP	FTR	FIN TUBE RADIATION	NIC	NOT IN CONTRACT	WH	UNIT HEATER
CT	COOLING TOWER	GAL	GALLONS	NO	NORMALLY OPEN, NUMBER	WB	WET BULB TEMPERATURE
CUH	CABINET UNIT HEATER	GC	GENERAL CONTRACTOR	OA	OUTSIDE AIR	WCU	WALL CASSETTE UNIT
dB	DECIBELS	GPM	GALLONS PER MINUTE	P	PUMP	WFS	WATER FLOW SWITCH
DB	DRY BULB TEMPERATURE	GR	GRAINS	PD	PRESSURE DROP	WG	WATER GAUGE
DC	DUST COLLECTOR	HD	HEAD	PG	PROPYLENE GLYCOL	WH	WALL HEATER
DIA	DIAMETER	HGR	HOT GLYCOL RETURN	PH	PHASE	WPD	WATER PRESSURE DROP
DN	DOWN	HGS	HOT GLYCOL SUPPLY	PSI	POUNDS PER SQUARE INCH	WWM	WELDED WIRE MESH
DP	DEWPOINT TEMPERATURE	HP	HORSEPOWER	PTAC	PACKAGED TERMINAL AIR CONDITIONER	ZD	ZONE DAMPER
DSD	DUCT SMOKE DETECTOR	HPC	HIGH PRESSURE CONDENSATE	RA	RETURN AIR		

NOTE: NOT ALL ABBREVIATIONS ARE USED.

A1 ABBREVIATIONS
SCALE: NOT TO SCALE

COMcheck Software Version COMcheckWeb

Mechanical Compliance Certificate

Project Information

Energy Code: 2021 IECC
Project Title: CAPE MAY WWD
Location: Cape May, New Jersey
Climate Zone: 4a
Project Type: New Construction

Construction Site: Owner/Agent: Designer/Contractor:

Additional Efficiency Package(s)
Credits: 10.0 Required 0.0 Proposed

Mechanical Systems List

Quantity System Type & Description

1 HVAC System (Single Zone):
Heating: 1 each - Other, Gas, Capacity = 580 kBtuh
No minimum efficiency requirement applies

Mechanical Compliance Statement

Compliance Statement: The proposed mechanical design represented in this document is consistent with the building plans, specifications, and other calculations submitted with this permit application. The proposed mechanical systems have been designed to meet the 2021 IECC requirements in COMcheck Version COMcheckWeb and to comply with any applicable mandatory requirements listed in the Inspection Checklist.

Corinne Januszka - Staff Engineer — Name - Title
Corinne Januszka — Signature
2/28/2024 — Date

Project Title: CAPE MAY WWD — Report date: 02/28/24
Data filename: — Page: 1 of 9

C3 MECHANICAL COMPLIANCE CERTIFICATE
SCALE: NOT TO SCALE

1. ALL WORK SHALL CONFORM TO ALL APPLICABLE RULES, REGULATIONS AND CODES, INCLUDING, BUT NOT LIMITED TO NEW JERSEY ENERGY CODE, 2021 BUILDING CODES OF NEW JERSEY AND OSHA.
2. ALL EQUIPMENT SHALL COMPLY WITH THE PROVISIONS OF THE CURRENT INTERNATIONAL ENERGY CODE AND AS MODIFIED BY NEW JERSEY. ALL SUBMITTALS FOR EQUIPMENT COVERED BY THE CODE SHALL INCLUDE THE MANUFACTURER'S STATEMENT OF CONFORMANCE TO THE CODE.
3. FIELD VERIFY ALL DIMENSIONS PRIOR TO ANY MECHANICAL WORK. MECHANICAL CONTRACTOR SHALL COORDINATE INSTALLATION OF EQUIPMENT, PIPING, AND ETC. WITH OTHER CONTRACTORS. PROVIDE FITTINGS, ELEVATION CHANGES, TRANSITIONS, AND OFFSETS REQUIRED, WHETHER SHOWN OR NOT, TO AVOID CONFLICTS WITH WORK OF OTHER CONTRACTS.
4. MECHANICAL CONTRACTOR SHALL BE RESPONSIBLE FOR SEALING ALL HVAC PENETRATIONS (PIPING, DUCTWORK, ETC.) IN ACCORDANCE WITH THE INTERNATIONAL BUILDING CODE AND WHERE SHOWN OR SPECIFIED.
5. ITEMS OF SPECIFIC MANUFACTURER'S SHALL BE INSTALLED IN STRICT ACCORDANCE WITH THE PRINTED INSTRUCTIONS AND/OR MANUFACTURER'S REPRESENTATIVES DIRECTIONS.
6. MECHANICAL CONTRACTOR TO INSTALL ALL NECESSARY STIFFENERS, BRACES, STRUTS, ETC, WHETHER SHOWN OR NOT, TO PROVIDE A COMPLETE, SAFE, AND DURABLE SYSTEM.
7. DIMENSIONS SHOWN "AFF" INDICATE THE ACTUAL CLEAR DIMENSIONS FROM THE BOTTOM OF THE ITEM TO THE FINISHED FLOOR ELEVATION; UNLESS INDICATED OTHERWISE.
8. SUPPORT AND EQUIPMENT DETAILS MAY VARY TO SUIT EQUIPMENT AND PARTS SUPPLIED.
9. WELD ALL STEEL ANGLE JOINTS UNLESS OTHERWISE SHOWN.
10. PROVIDE NECESSARY BY-PASSES AND BALANCING MEANS AS REQUIRED TO ASSURE PROPER SYSTEM OPERATION.
11. PROVIDE ALL CONTROL AND INTERLOCK WIRING REQUIRED OR SPECIFIED THAT IS NOT PROVIDED BY THE ELECTRICAL CONTRACTOR.
12. COORDINATE WITH ELECTRICAL CONTRACTOR AND FIRE PROTECTION CONTRACTOR REGARDING THE RESPONSIBILITIES FOR SUPPLYING, INSTALLING AND WIRING OF HVAC-RELATED DISCONNECT SWITCHES, STARTERS, SAFETY INTERLOCKS, EMERGENCY SHUTDOWN AND WIRING.
13. WORK ON M-SERIES DRAWINGS IS BY THE MECHANICAL CONTRACTOR UNLESS OTHERWISE NOTED.
14. VERIFY ALL LOCATIONS, DIMENSIONS, EQUIPMENT ARRANGEMENTS, CLEARANCES AND ELECTRICAL CHARACTERISTICS IN THE FIELD PRIOR TO BID. PROMPTLY NOTIFY THE ENGINEER OF ANY DISCREPANCIES.
15. PRIOR TO CUTTING THROUGH FLOORS AND WALLS, THE CONTRACTOR SHALL VERIFY THE LOCATIONS OF ALL STRUCTURAL MEMBERS, JOISTS, AND OR COLUMNS. PROMPTLY NOTIFY THE ARCHITECT/ENGINEER OF ANY DISCREPANCIES. DO NOT CUT ANY STRUCTURAL MEMBERS UNLESS SPECIFICALLY DIRECTED TO DO SO.
16. INSTALL ALL NEW PIPE WITHIN EXISTING OPENINGS SUCH THAT IT ALLOWS AS MUCH SPACE AS POSSIBLE TO ONE SIDE WHICH MAY ALLOW PASSAGE.

A3 GENERAL NOTES
SCALE: NOT TO SCALE

PIPING

BALL VALVE
BUTTERFLY VALVE
CHECK VALVE
NEEDLE VALVE
PRESSURE RELIEF VALVE
MANUAL AIR VENT
AUTOMATIC AIR VENT
PRESSURE GAUGE
THERMOMETER
FLEXIBLE PIPE CONNECTOR
UNION
REDUCER
STRAINER
TRIPLE DUTY VALVE
TWO-WAY CONTROL VALVE
THREE-WAY CONTROL VALVE
PIPE DROP
PIPE RISER
PIPE ANCHOR
PIPE GUIDE
OR — PIPE CAP
OR — CALIBRATED FLOW BALANCING VALVE
OR — INLINE PUMP
AIR SEPARATOR
BASE MOUNTED PUMP
PIPE CONNECTION OFF BOTTOM
PIPE CONNECTION OFF TOP

DUCTWORK

RETURN GRILLE
SUPPLY DIFFUSER
EXHAUST GRILLE
LINEAR SLOT DIFFUSER
SQUARE TO ROUND DUCT TRANSITION
SQUARE MAIN TO ROUND BRANCH TAKE-OFF
FC — FLEXIBLE DUCT CONNECTOR
POSITIVELY PRESSURIZED SUPPLY DUCT OUT OF THE PLANE
POSITIVELY PRESSURIZED SUPPLY DUCT INTO THE PLANE
NEGATIVELY PRESSURIZED RETURN DUCT OUT OF THE PLANE
NEGATIVELY PRESSURIZED RETURN DUCT INTO THE PLANE
NEGATIVELY PRESSURIZED EXHAUST DUCT OUT OF THE PLANE
NEGATIVELY PRESSURIZED EXHAUST DUCT INTO THE PLANE
SQUARE ELBOW WITH TURNING VANES
AAD — MANUAL VOLUME DAMPER
AAD OR AAD — AUTOMATIC AIR DAMPER
TYPE / CFM — NECK SIZE (TYPICAL OF) — DIFFUSER/GRILLE/REGISTER DESIGNATION
UNIT — GENERAL EQUIPMENT DESIGNATION
UNIT / GPM/GPM — HEATING / COOLING — UNIT WITH HEATING AND COOLING
UNIT / MAX. CFM — UNIT WITH AIR FLOW
UNIT / GPM — UNIT WITH HEATING OR COOLING
TYPE NO. — FTR-X — FIN-TUBE RADIATION DESIGNATION
ACTIVE LENGTH — X'-X"
BALANCED FLOW — X.X GPM

GENERAL

NEW PIPING
EXISTING PIPING
REMOVALS
DISCONNECT FROM EXISTING
CONNECT TO EXISTING
TS — TEMPERATURE SENSOR
T — THERMOSTAT
T G — THERMOSTAT W/ GUARD
T D — THERMOSTAT W/ DIGITAL DISPLAY
P — PRESSURE SENSOR
H — HUMIDISTAT
CO_2 — CARBON DIOXIDE SENSOR (DEMAND CONTROL VENTILATION)
CO — CARBON MONOXIDE SENSOR
DP — DIFFERENTIAL PRESSURE SENSOR
M — DAMPER ACTUATOR
S — SOLENOID ACTUATOR
DIRECTION OF AIRFLOW
X — KEYNOTE
VIEW / SHEET — ENLARGED PLAN & DETAIL CALL OUT
FD — FIRE DAMPER
VOLUME DAMPER

NOTE: NOT ALL SYMBOLS ARE USED.

A4 SYMBOLS
SCALE: NOT TO SCALE

C&S COMPANIES®
C&S Engineers, Inc.
1600 Market St.
Suite 3450
Philadelphia, PA 19103
Phone: (215) 709-4340
www.cscos.com

STATE OF NEW JERSEY — FRANCESCA K. NUTLEY — No. GE60319 — LICENSED PROFESSIONAL ENGINEER
May 8, 2024

DRBA DELAWARE RIVER & BAY AUTHORITY

WWD HANGAR DESIGN
DELAWARE RIVER AND BAY AUTHORITY
505 FORESTAL ROAD
CAPE MAY, NJ 08242

MARK	DATE	DESCRIPTION

REVISIONS

PROJECT NO:	872.013.088
DATE:	MARCH 2024
DRAWN BY:	C.K. JANUSZKA
DESIGNED BY:	C.K. JANUSZKA
CHECKED BY:	A.J. MILNE, P.E.

CONTRACTOR SHALL VERIFY ALL CONDITIONS ON JOB SITE & NOTIFY THE OWNER OF ANY VARIATIONS FROM DIMENSIONS SHOWN ON THESE DRAWINGS BEFORE PROCEEDING WITH ANY CONSTRUCTION.

ABBREVIATIONS, GENERAL NOTES, AND SYMBOLS

M-001

Copyright ©

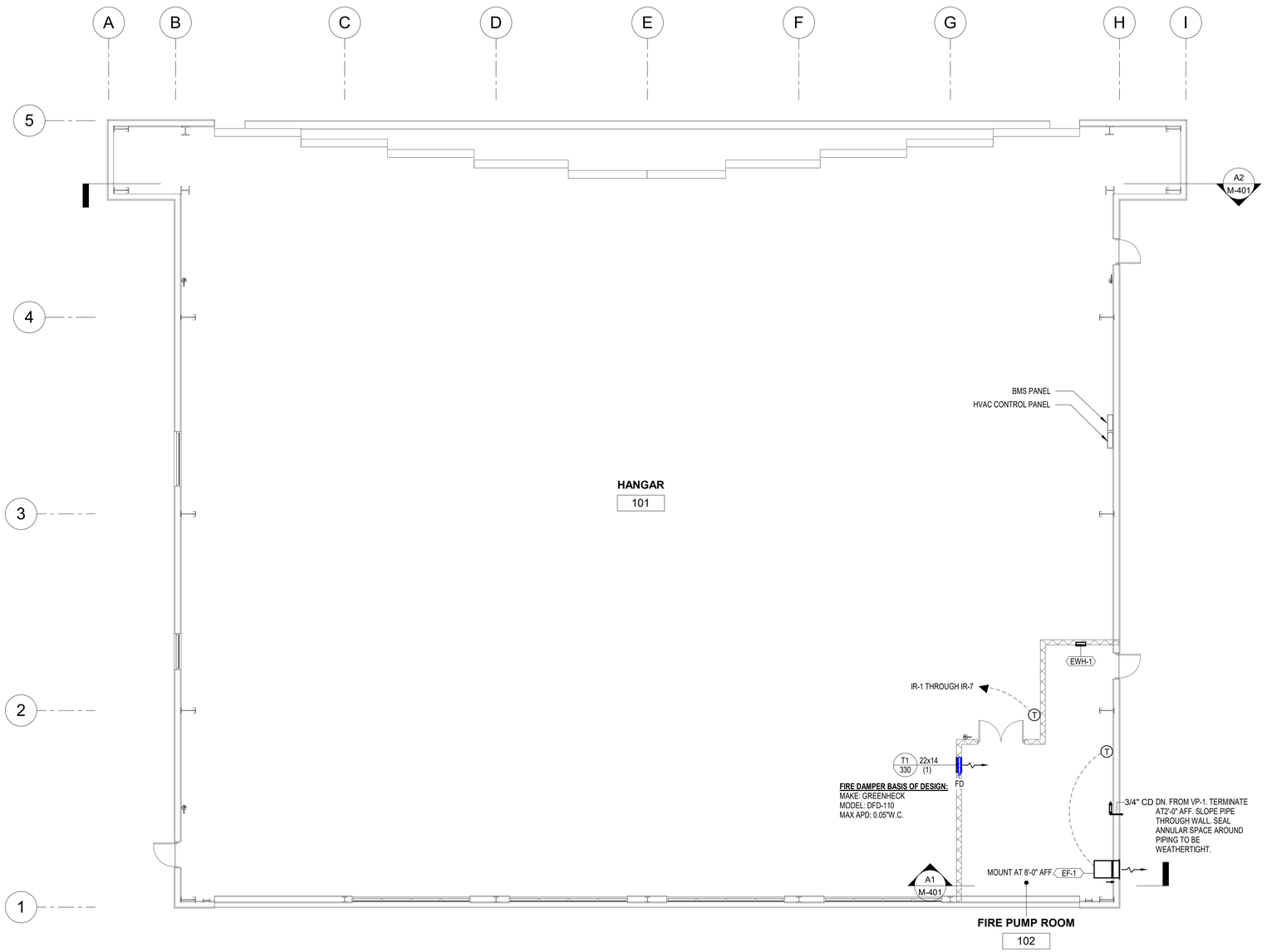

PLAN NORTH

A1 HVAC FLOOR PLAN
SCALE: 1/8" = 1'-0"

0 4' 8' 16'

C&S COMPANIES®

C&S Engineers, Inc.
1600 Market St.
Suite 3450
Philadelphia, PA 19103
Phone: (215) 709-4340
www.cscos.com

STATE OF NEW JERSEY
FRANCESCA K. NELLY
No. GE60319
LICENSED PROFESSIONAL ENGINEER

May 8, 2024

DRBA
DELAWARE RIVER & BAY AUTHORITY

WWD HANGAR DESIGN
DELAWARE RIVER AND BAY AUTHORITY
505 FORESTAL ROAD
CAPE MAY, NJ 08242

MARK	DATE	DESCRIPTION

REVISIONS

PROJECT NO:	872.013.088
DATE:	MARCH 2024
DRAWN BY:	C.K. JANUSZKA
DESIGNED BY:	C.K. JANUSZKA
CHECKED BY:	A.J. MILNE, P.E.

CONTRACTOR SHALL VERIFY ALL CONDITIONS ON JOB SITE & NOTIFY THE OWNER OF ANY VARIATIONS FROM DIMENSIONS SHOWN ON THESE DRAWINGS BEFORE PROCEEDING WITH ANY CONSTRUCTION.

HVAC FLOOR PLAN

M-101

Copyright ©

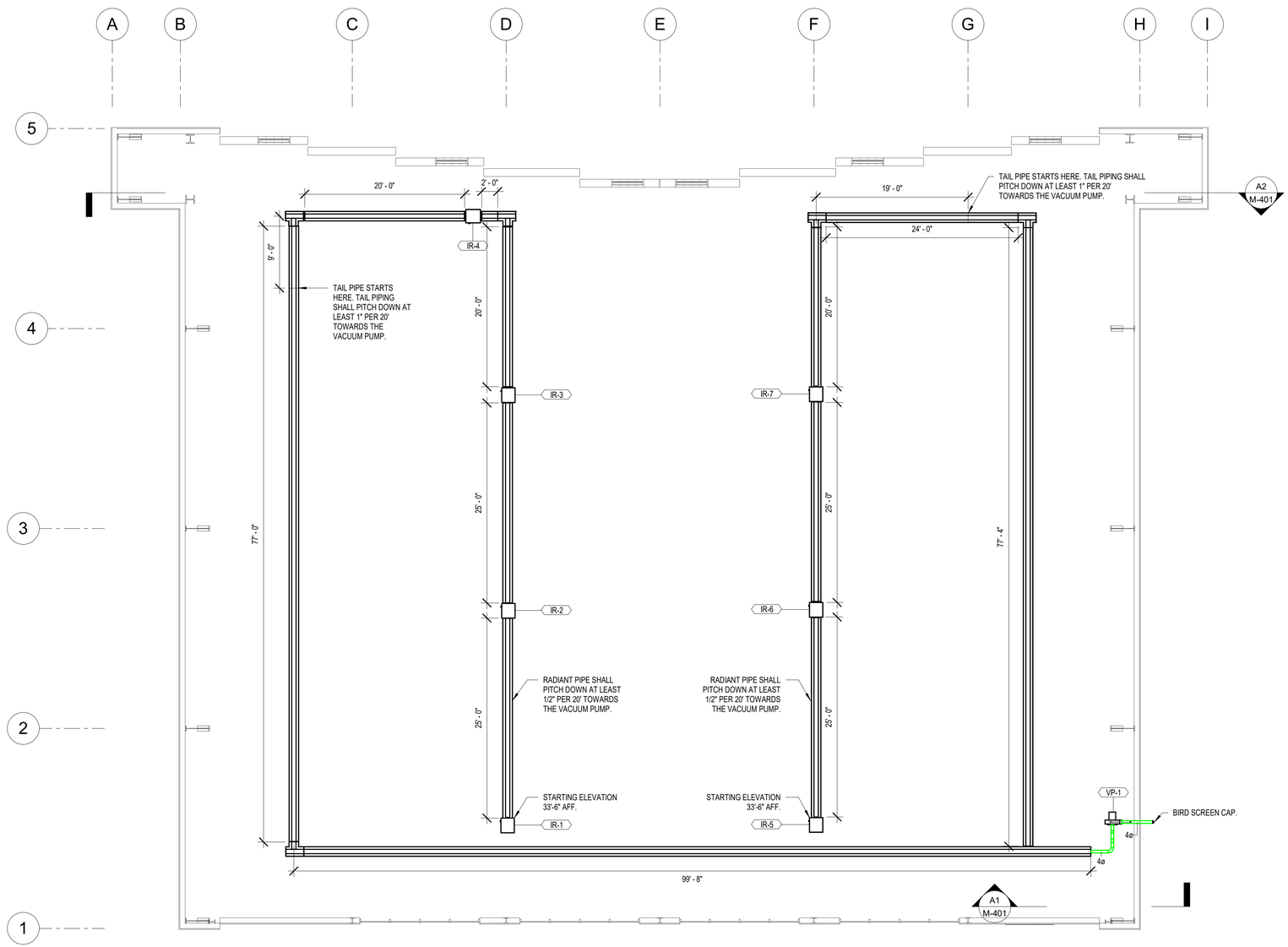

PLAN NORTH

A1 HVAC CEILING PLAN
SCALE: 1/8" = 1'-0"

0 4' 8' 16'

C&S COMPANIES®

C&S Engineers, Inc.
1600 Market St.
Suite 3450
Philadelphia, PA 19103
Phone: (215) 709-4340
www.cscos.com

STATE OF NEW JERSEY
FRANCESCA K. KELLEY
No. GE60319
LICENSED PROFESSIONAL ENGINEER
May 8, 2024

DRBA
DELAWARE RIVER & BAY AUTHORITY

WWD HANGAR DESIGN
DELAWARE RIVER AND BAY AUTHORITY
505 FORESTAL ROAD
CAPE MAY, NJ 08242

MARK	DATE	DESCRIPTION

REVISIONS

PROJECT NO:	872.013.088
DATE:	MARCH 2024
DRAWN BY:	C.K. JANUSZKA
DESIGNED BY:	C.K. JANUSZKA
CHECKED BY:	A.J. MILNE, P.E.

CONTRACTOR SHALL VERIFY ALL CONDITIONS ON JOB SITE & NOTIFY THE OWNER OF ANY VARIATIONS FROM DIMENSIONS SHOWN ON THESE DRAWINGS BEFORE PROCEEDING WITH ANY CONSTRUCTION.

HVAC CEILING PLAN

M-102

Copyright ©

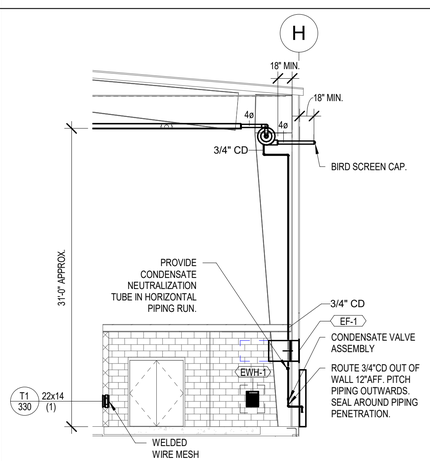

A1 VACUUM PUMP ELEVATION
SCALE: 1/8" = 1'-0"

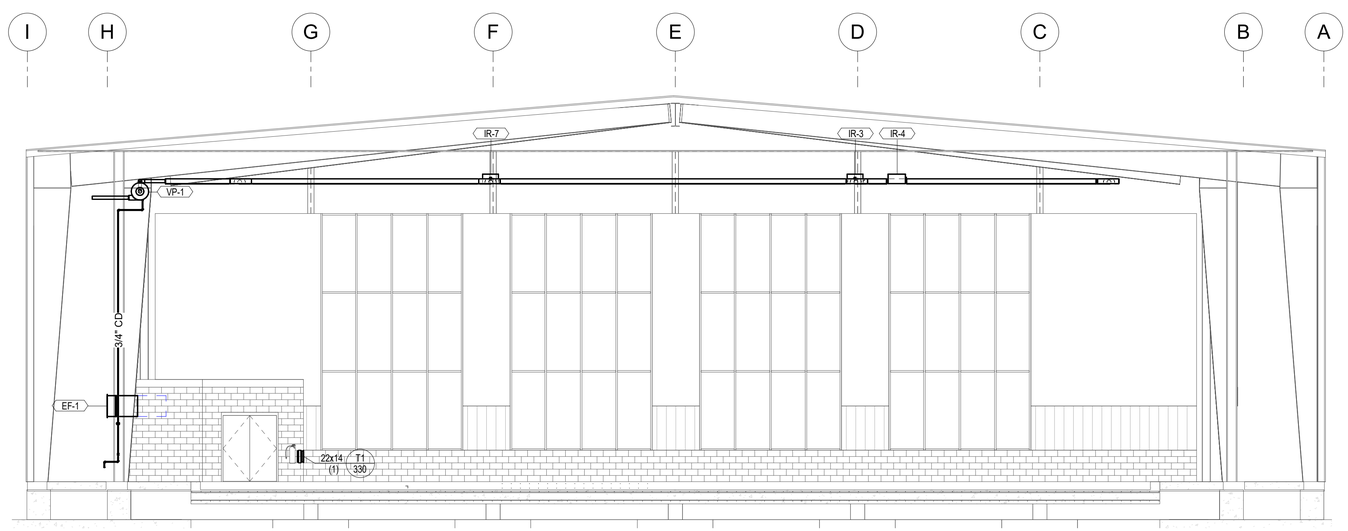

A2 INFRARED HEATING ELEVATION
SCALE: 1/8" = 1'-0"

C&S COMPANIES®
C&S Engineers, Inc.
1600 Market St.
Suite 3450
Philadelphia, PA 19103
Phone: (215) 709-4340
www.cscos.com

STATE OF NEW JERSEY
FRANCESCA K. NEILEY
No. GE60319
LICENSED PROFESSIONAL ENGINEER
May 8, 2024

DRBA
DELAWARE RIVER & BAY AUTHORITY

WWD HANGAR DESIGN
DELAWARE RIVER AND BAY AUTHORITY
505 FORESTAL ROAD
CAPE MAY, NJ 08242

MARK	DATE	DESCRIPTION

REVISIONS

PROJECT NO:	872.013.088
DATE:	MARCH 2024
DRAWN BY:	C.K. JANUSZKA
DESIGNED BY:	C.K. JANUSZKA
CHECKED BY:	A.J. MILNE, P.E.

CONTRACTOR SHALL VERIFY ALL CONDITIONS ON JOB SITE & NOTIFY THE OWNER OF ANY VARIATIONS FROM DIMENSIONS SHOWN ON THESE DRAWINGS BEFORE PROCEEDING WITH ANY CONSTRUCTION.

ELEVATIONS

M-401

Copyright ©

EXHAUST FAN SCHEDULE (EF)

MARK	SERVICE	LOCATION	TYPE	ARRANGEMENT	CFM	ESP (IN WG)	BHP	RPM	MAX. SONES	ELECTRICAL DATA VOLTS	PHASE	HP	BASIS OF DESIGN MANUFACTURER	MODEL	REMARKS
EF-1	FIRE PUMP ROOM 102	FIRE PUMP ROOM 102	DIRECT DRIVE	SIDEWALL	330	0.1	0.02	562	2.6	120	1	1/4	GREENHECK	AER-20-03-0610-VG	1,2,3,4

1. PROVIDE VARI-GREEN MOTOR FOR EASE OF BALANCING.
2. PROVIDE WALL SLEEVE/HOUSING, OSHA MOTOR SIDE GAURD, 24VAC INSULATED CLASS 1A AUTOMATIC AIR DAMPER, AND WEATHERHOOD OR LOUVER.
3. FAN SHALL OPERATE TO MAINTAIN SPACE TEMPERATURE SETPOINT VIA WALL-MOUNTED THERMOSTAT.
4. PROVIDE DISCONNECT SWITCH.

INFRARED BURNER SCHEDULE (IR)

UNIT NO.	LOCATION	FUEL TYPE	INPUT MBH	GAS PRESSURE MIN. (IN WG)	GAS PRESSURE MAX. (IN WG)	# OF STAGES	ELECTRICAL VOLTS	PHASE	MCA	BASIS OF DESIGN MANUFACTURER	MODEL	REMARKS
IR-1	HANGAR 101	NATURAL GAS	80	10.5	14	1	120	1	0.3	ROBERTS GORDON	CRV-B-8	1,2
IR-2	HANGAR 101	NATURAL GAS	80	10.5	14	1	120	1	0.3	ROBERTS GORDON	CRV-B-8	1,2
IR-3	HANGAR 101	NATURAL GAS	80	10.5	14	1	120	1	0.3	ROBERTS GORDON	CRV-B-8	1,2
IR-4	HANGAR 101	NATURAL GAS	80	10.5	14	1	120	1	0.3	ROBERTS GORDON	CRV-B-8	1,2
IR-5	HANGAR 101	NATURAL GAS	80	10.5	14	1	120	1	0.3	ROBERTS GORDON	CRV-B-8	1,2
IR-6	HANGAR 101	NATURAL GAS	80	10.5	14	1	120	1	0.3	ROBERTS GORDON	CRV-B-8	1,2
IR-7	HANGAR 101	NATURAL GAS	100	10.5	14	1	120	1	0.3	ROBERTS GORDON	CRV-B-10	1,2

1. ELECTRICAL CONTRACTOR SHALL PROVIDE RECEPTACLE WITHIN 18" OF EACH BURNER.
2. PLUMBING CONTRACTOR SHALL PROVIDE GAS PIPING TO EACH BURNER. MECHANICAL CONTRACTOR SHALL MAKE FINAL CONNECTION.

ELECTRIC WALL HEATER SCHEDULE (EWH)

UNIT NO.	CAPACITY BTUH	CAPACITY KW	CFM	ENCLOSURE HEIGHT	WIDTH	DEPTH	MOUNTING HEIGHT	ELECTRICAL VOLTS	PHASE	MCA	MANUFACTURER	MODEL	REMARKS
EWH-1	6142	1.8	100	19 15/16"	1' - 3 3/4"	1 1/4"	18" TO BOTTOM OF UNIT	120	1	20	MARLEY ENGINEERED PRODUCTS	AWH3180F	1,2,3

1. PROVIDE SURFACE MOUNTING FRAME.
2. PROVIDE WITH INTEGRAL THERMOSTAT.
3. PROVIDE WITH INTEGRAL DISCONNECT SWITCH.

VACUUM PUMP SCHEDULE (VP)

UNIT NO.	LOCATION	ARRANGEMENT	SYSTEM SERVED	ELECTRICAL VOLTS	PHASE	RPM	HP	BASIS OF DESIGN MANUFACTURER	MODEL	REMARKS
VP-1	HANGAR 101	HORIZONTAL DISCHARGE	IR-1 THROUGH IR-7	120	1	3450	3/4	ROBERTS GORDON	EP201	1,2

1. POWERED FROM RESPECTIVE CONTROL PANEL. ELECTRICAL CONTRACTOR SHALL PROVIDE ELECTRICAL WIRING, MECHCANICAL CONTRACTOR SHALL PROVIDE CONTROL WIRING.
2. PROVIDE CONDENSATE NEUTRALIZATION TUBE AND CONDENSATE VALVE ASSBEMBLY.

TRANSFER GRILLE SCHEDULE (T)

TYPE	DESCRIPTION	FACE SIZE	MAX. NC	APD ("W.C.)	MATERIAL	FINISH	BASIS OF DESIGN MANUFACTURER	MODEL	REMARKS
T1	TRANSFER GRILLE	SEE PLANS	25	0.10	ALUMINUM	WHITE	PRICE INDUSTRIES	ATG1	1

1. COORDINATE WITH ENGINEER FOR FINAL COLOR SELECTION.

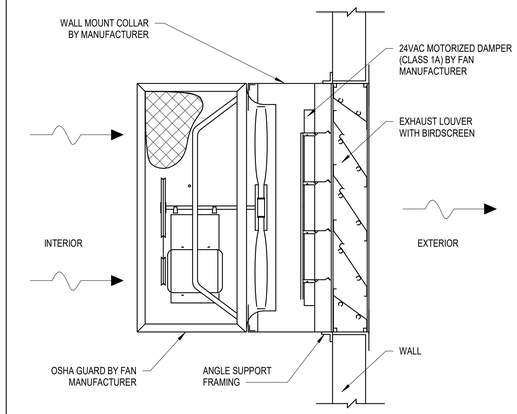

C4 EXHAUST PROPELLER WALL FAN DETAIL
SCALE: NOT TO SCALE

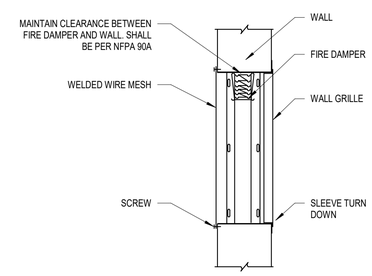

B3 FIRE DAMPER GRILLE DETAIL
SCALE: NOT TO SCALE

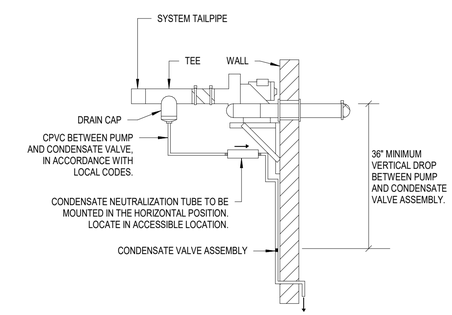

B4 CONDENSATE REMOVAL FOR IR
SCALE: NOT TO SCALE

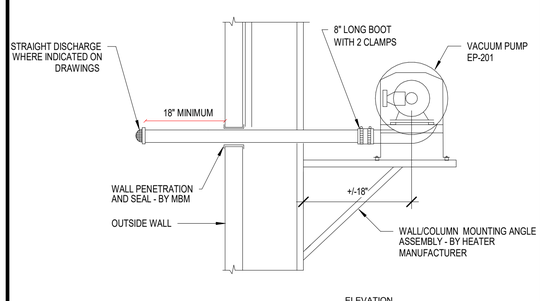

DETAIL NOTES:

1. WALL SHALL BE MADE BY METAL BUILDING MANUFACTURER USING RUBBER "DEKTITE" PIPE FLASHING.
2. DENOTED AS ON HEATING PLANS.
3. COORDINATE INSTALLATION AND MOUNTING REQUIREMENTS WITH THE METAL BUILDING MANUFACTURER.

A1 VACUUM PUMP VENT DETAIL
SCALE: NOT TO SCALE

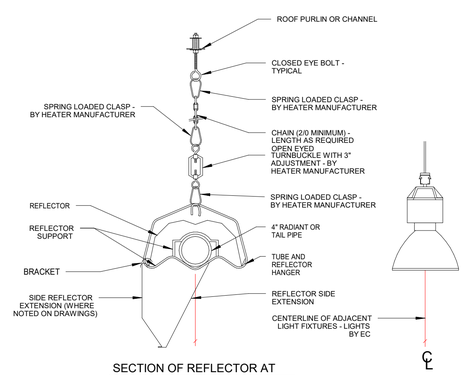

SECTION OF REFLECTOR AT TUBE AND REFLECTOR HANGER

A2 REFLECTOR AND REFLECTOR HANGER DETAIL
SCALE: NOT TO SCALE

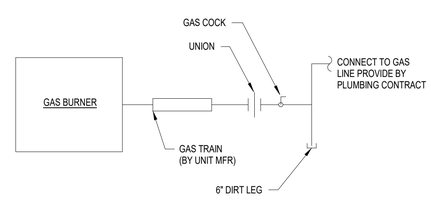

A3 GAS CONNECTION DETAIL
SCALE: NOT TO SCALE

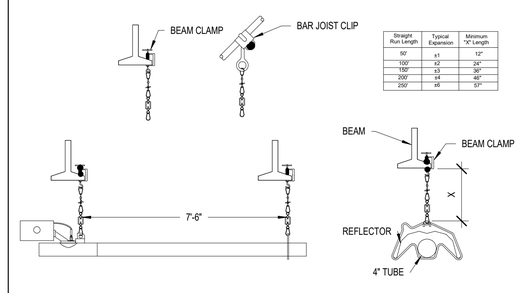

Straight Run Length	Typical Expansion	Minimum "X" Length
50'	±1	12"
100'	±2	24"
150'	±3	30"
200'	±4	46"
250'	±6	51"

NOTES: FIRST HANGER AFTER EACH BURNER SHALL BE 7'-6" DOWNSTREAM. AFTER THAT ALL OTHER HANGERS SHALL BE SPACED AT 10'-0".

A4 INFRARED HEATING SYSTEM HANGER DETAIL
SCALE: NOT TO SCALE

C&S COMPANIES®
C&S Engineers, Inc.
1600 Market St.
Suite 3450
Philadelphia, PA 19103
Phone: (215) 709-4340
www.cscos.com

STATE OF NEW JERSEY — FRANCESCA K. NEILEY — No. GE60319 — LICENSED PROFESSIONAL ENGINEER
May 8, 2024

DRBA DELAWARE RIVER & BAY AUTHORITY

WWD HANGAR DESIGN
DELAWARE RIVER AND BAY AUTHORITY
505 FORESTAL ROAD
CAPE MAY, NJ 08242

MARK	DATE	DESCRIPTION

REVISIONS

PROJECT NO:	872.013.088
DATE:	MARCH 2024
DRAWN BY:	C.K. JANUSZKA
DESIGNED BY:	C.K. JANUSZKA
CHECKED BY:	A.J. MILNE, P.E.

CONTRACTOR SHALL VERIFY ALL CONDITIONS ON JOB SITE & NOTIFY THE OWNER OF ANY VARIATIONS FROM DIMENSIONS SHOWN ON THESE DRAWINGS BEFORE PROCEEDING WITH ANY CONSTRUCTION.

DETAILS AND SCHEDULES

M-501

Copyright ©

ONE-LINE SYMBOLS			
	DISCONNECT SWITCH (TICKS INDICATE NUMBER OF POLES)		UTILITY POLE
	CIRCUIT BREAKER (TICKS INDICATE NUMBER OF POLES)	M	METER
	FUSED DISCONNECT SWITCH (TICKS INDICATE NUMBER OF POLES)	C	CONTACTOR ("M" DENOTES MOTOR CONTACTOR)
BPS	BOLTED PRESSURE SWITCH w/FUSE		CONTACTS (NORMALLY OPEN)
	TRANSFORMER		CONTACTS (NORMALLY CLOSED)
	GROUND		INDICATOR LIGHT LETTER INDICANTS COLOR. R=RED, G=GREEN, Y=YELLOW, B=BLUE, NO LETTER=CLEAR
	CONNECTION POINT OR CABLE SPLICE		FUSE
			PANELBOARD

C1 ONE-LINE SYMBOLS

SCALE: NOT TO SCALE

COMcheck Software Version 4.1.5.5

Interior Lighting Compliance Certificate

Project Information

Energy Code: 2018 IECC
Project Title: WWD HANGAR
Project Type: New Construction

Construction Site:
FORRESTAL ROAD
CAPE MAY, NJ

Owner/Agent:
DRBA

Designer/Contractor:
FRANCESCA NEILEY
C&S ENGINEERS, INC.
1500 MARKET STREET
PHILADELPHIA, PA 19102
FNEILEY@CSCOS.COM

Additional Efficiency Package(s)

Credits: 1.0 Required 0.0 Proposed

Allowed Interior Lighting Power

A Area Category	B Floor Area (ft2)	C Allowed Watts / ft2	D Allowed Watts (B X C)
1-Common Space Types:Storage >=1000 sq.ft.	11791	0.46	5424
		Total Allowed Watts =	5424

Proposed Interior Lighting Power

A Fixture ID : Description / Lamp / Wattage Per Lamp / Ballast	B Lamps/ Fixture	C # of Fixtures	D Fixture Watt.	E (C X D)
1-Common Space Types:Storage >=1000 sq.ft.				
A: A: LED Linear 33W:	1	42	111	4662
			Total Proposed Watts =	4662

Interior Lighting PASSES: Design 14% better than code

Interior Lighting Compliance Statement

Compliance Statement: The proposed interior lighting design represented in this document is consistent with the building plans, specifications, and other calculations submitted with this permit application. The proposed interior lighting systems have been designed to meet the 2018 IECC requirements in COM*check* Version 4.1.5.5 and to comply with any applicable mandatory requirements listed in the Inspection Checklist.

Name - Title _____ Signature _____ Date _____

Project Title: WWD HANGAR
Data filename: F:\Project\872 - DELAWARE RIVER & BAY AUTHORITY\872013088 WWD Hangar Design\Design\Technical\Electrical\Code Compliance.cck
Report date: 10/06/23
Page 1 of 7

COMcheck Software Version 4.1.5.5

Exterior Lighting Compliance Certificate

Project Information

Energy Code: 2018 IECC
Project Title: WWD HANGAR
Project Type: New Construction
Exterior Lighting Zone 2 (Light industrial area with limited nighttime use (LZ2))

Construction Site:
FORRESTAL ROAD
CAPE MAY, NJ

Owner/Agent:
DRBA

Designer/Contractor:
FRANCESCA NEILEY
C&S ENGINEERS, INC.
1500 MARKET STREET
PHILADELPHIA, PA 19102
FNEILEY@CSCOS.COM

Allowed Exterior Lighting Power

A Area/Surface Category	B Quantity	C Allowed Watts / Unit	D Tradable Wattage	E Allowed Watts (B X C)
Walkway >= 10 feet wide	6800 ft2	0.1	Yes	680
Walkway < 10 feet wide	6 ft of	0.5	Yes	3
			Total Tradable Watts (a) =	683
			Total Allowed Watts =	683
			Total Allowed Supplemental Watts (b) =	400

(a) Wattage tradeoffs are only allowed between tradable areas/surfaces.
(b) A supplemental allowance equal to 400 watts may be applied toward compliance of both non-tradable and tradable areas/surfaces.

Proposed Exterior Lighting Power

A Fixture ID : Description / Lamp / Wattage Per Lamp / Ballast	B Lamps/ Fixture	C # of Fixtures	D Fixture Watt.	E (C X D)
Walkway >= 10 feet wide (6800 ft2): Tradable Wattage				
C: C: LED Linear 33W:	1	6	106	636
Walkway < 10 feet wide (6 ft of walkway length): Tradable Wattage				
B: B: LED Linear 33W:	1	2	56	112
			Total Tradable Proposed Watts =	748

Exterior Lighting PASSES: Design 31% better than code

Exterior Lighting Compliance Statement

Compliance Statement: The proposed exterior lighting design represented in this document is consistent with the building plans, specifications, and other calculations submitted with this permit application. The proposed exterior lighting systems have been designed to meet the 2018 IECC requirements in COM*check* Version 4.1.5.5 and to comply with any applicable mandatory requirements listed in the Inspection Checklist.

Name - Title _____ Signature _____ Date _____

Project Title: WWD HANGAR
Data filename: F:\Project\872 - DELAWARE RIVER & BAY AUTHORITY\872013088 WWD Hangar Design\Design\Technical\Electrical\Code Compliance.cck
Report date: 10/06/23
Page 2 of 7

PLAN SYMBOLS	
	EXISTING WORK LINETYPE
or	DEMOLITION WORK LINETYPES
	NEW WORK LINETYPE
XX	DUPLEX RECEPTACLE, MOUNT AT 18" AFF UNLESS NOTATION INDICATES OTHERWISE. CTR = ABOVE COUNTER IG = ISOLATED GROUND GFI = GROUND FAULT CIRCUIT INTERRUPTER, MOUNT AT 48" AFF UNLESS OTHERWISE NOTED WP = GFI WITH WEATHERPROOF COVER, MOUNT AT 42" AFF UNLESS OTHERWISE NOTED XP = EXPLOSION PROOF SP = SURGE PROTECTED
	QUAD RECEPTACLE, MOUNT 18" AFF UNLESS OTHERWISE NOTED
	STATIC GROUND RECEPTACLE
XX	SINGLE POLE SWITCH, UNLESS NOTATION INDICATES OTHERWISE. OS = OCCUPANCY SENSOR OSD = OCCUPANCY SENSOR WITH DIMMER 2 = DOUBLE POLE SWITCH 3 = THREE-WAY SWITCH 4 = FOUR-WAY SWITCH D = DIMMER SWITCH K = KEYED SWITCH M = MANUAL MOTOR STARTER T = TIMER SWITCH LV = LOW VOLTAGE SWITCH
VFD	COMBINATION MOTOR STARTER/CIRCUIT BREAKER DISCONNECT SWITCH VFD = VARIABLE FREQUENCY DRIVE
	FUSED DISCONNECT SWITCH
	NON FUSED DISCONNECT SWITCH
J	JUNCTION BOX
	ELECTRICAL MOTOR (SEE EQUIPMENT CONNECTION SCHEDULE)
	PANEL BOARD, REFER TO PANEL BOARD SCHEDULE
XXX	BRANCH CIRCUIT HOME RUN WITH CIRCUIT NUMBER SEE PANEL SCHEDULES FOR DETAILS
A	2'X4' LUMINAIRE, LETTER DENOTES TYPE, SEE LUMINAIRE SCHEDULE NL = NIGHT LIGHT
A	1'X4' LUMINAIRE, LETTER DENOTES TYPE, SEE LUMINAIRE SCHEDULE NL = NIGHT LIGHT
A	2'X2' LUMINAIRE, LETTER DENOTES TYPE, SEE LUMINAIRE SCHEDULE NL = NIGHT LIGHT
A	POLE MOUNTED LUMINAIRE LETTER DENOTES TYPE, SEE LUMINAIRE SCHEDULE
A	INDICATES WALL MOUNTED LUMINAIRE, LETTER DENOTES TYPE, SEE LUMINAIRE SCHEDULE
A NL	INDICATES EMERGENCY LUMINAIRE, LETTER DENOTES TYPE, SEE LUMINAIRE SCHEDULE NL = NIGHT LIGHT
	EMERGENCY LIGHT WITH BATTERY PACK; CIRCUIT WITH AREA LIGHTING
OS	CEILING MOUNTED OCCUPANCY SENSOR
HH	HANDHOLE
UE	UNDERGROUND ELECTRIC
	UNDERGROUND ELECTRIC DUCTBANK
A	EXIT LUMINAIRE, SHADED AREA DENOTES FACE, LETTER DENOTES TYPE CIRCUIT WITH AREA LIGHTING

A3 PLAN SYMBOLS

SCALE: NOT TO SCALE

1. ALL ELECTRICAL WORK SHALL CONFORM TO ALL STATE, LOCAL, AND NATIONAL ELECTRICAL CODES.
2. ELECTRICAL CHARACTERISTICS SHALL BE VERIFIED WITH EQUIPMENT MANUFACTURER.
3. ITEMS OF SPECIFIC MANUFACTURERS SHALL BE INSTALLED IN STRICT ACCORDANCE WITH MANUFACTURER'S PRINTED INSTRUCTIONS AND/OR MANUFACTURER'S REPRESENTATIVE'S DIRECTIONS.
4. THE CONTRACTOR SHALL FIELD VERIFY ALL LOCATIONS AND DIMENSIONS SHOWN ON DRAWINGS
5. ALL CONDUIT AND WIRING SCHEDULES SHALL BE VERIFIED BEFORE INSTALLATION.
6. THE ELECTRICAL CONTRACTOR SHALL COORDINATE THE INSTALLATION OF ALL EQUIPMENT WITH OTHER CONTRACTORS.
7. ALL AREAS DISTURBED BY WORK SHALL BE RESTORED TO A CONDITION EQUAL TO OR BETTER THAN ORIGINAL AS DETERMINED BY THE ENGINEER.
8. THE CONTRACTOR SHALL PROVIDE RACEWAYS, WIRING, AND CONNECTIONS FOR ALL CONTROL CIRCUITS AND INTERLOCK.
9. ALL ELECTRICAL CONDUIT AND CONDUCTORS DISCONNECTED AND NOT TO BE REUSED SHALL BE REMOVED.
10. CONTRACTOR SHALL FIELD VERIFY ALL EXISTING CONDITIONS BEFORE STARTING WORK. IF ONLY A PORTION OF AN EXISTING CIRCUIT IS BEING REMOVED FOR DEMOLITION, CONTINUITY SHALL BE MAINTAINED TO THE REST OF THE REMAINING CIRCUIT.
11. ALL BRANCH CIRCUIT CONDUCTORS SHALL BE #12AWG UNLESS OTHERWISE SHOWN.
12. ALL BRANCH CIRCUITS SHALL CONSIST OF 2 CONDUCTORS PLUS GROUND, UNLESS OTHERWISE SHOWN.

C4 ELECTRICAL GENERAL NOTES

SCALE: NOT TO SCALE

A	AMPERE
A/C	AIR CONDITIONING
AC	ALTERNATE CURRENT
ACCU	AIR COOLED CONDENSING UNIT
AF	AMPERE FRAME
AFF	ABOVE FINISHED FLOOR
AFG	ABOVE FINISHED GRADE
AH	AIR HANDLER
AIC	AMPERE INTERRUPTING CAPACITY
AT	AMPERE TRIP
ATS	AUTOMATIC TRANSFER SWITCH
AU	AT UNIT
AUX	AUXILIARY
AWG	AMERICAN WIRE GAUGE
BC	BARE COPPER
BFG	BELOW FINISHED GRADE
BRK	BREAKER
BOH	BACK OF HOUSE
C	CONDUIT
CA	CABLE
CAB	CABINET
CAT5E	CATEGORY-5E
CC	CABLED CONDUCTORS
CH	CHILLER
CKT	CIRCUIT
CLL	CONTRACT LIMIT LINE
CMH	COMMUNICATION MANHOLE
CO	CONDUIT ONLY
COMM	COMMUNICATION
CPB	COMMUNICATION PULLBOX
CT	CURRENT TRANSFORMER
CTR	ABOVE COUNTER
CUC	COMMON USER CABLE
CUTC	COMMON USER TERMINAL CABINET
D	DEEP
DC	DIRECT CURRENT
DISC	DISCONNECT
DN	DOWN
DP	DISTRIBUTION PANEL
DPST	DOUBLE POLE SINGLE THROW
DPDT	DOUBLE POLE DOUBLE THROW
EER	ELECTRICAL EQUIPMENT ROOM
ELECT	ELECTRICAL
ELEV	ELEVATION
EMT	ELECTRICAL METALLIC TUBING
EQUIP	EQUIPMENT
EXIST	EXISTING
F	FUSE
FA	FIRE ALARM
FACP	FIRE ALARM CONTROL PANEL
FAT	FIRE ALARM TERMINATION
FBO	FURNISHED BY OWNER
FD/SD	FIRE DAMPER / SMOKE DETECTOR
FDR	FEEDER
FLA	FULL LOAD AMPERES
GFI	GROUND FAULT INTERRUPT
GND	GROUND
H	HIGH
HP	HORSEPOWER
HZ	HERTZ
I/C	INTERCOM
IG	ISOLATED GROUND
IMC	INTERMEDIATE METAL CONDUIT
JB	JUNCTION BOX
KA	KILOAMP
KV	KILOVOLT
KVA	KILOVOLT AMPERES
KW	KILOWATT
KWH	KILOWATT HOUR
KWHD	KILOWATT HOUR DEMAND METER
L	LENGTH, LONG
LGT	LIGHTING
MA	MILLIAMPERES
MBB	MONITOR BREAKOUT BOX
MCB	MAIN CIRCUIT BREAKER
MCC	MOTOR CONTROL CENTER
MCM	1000 CIRCULAR MILLS
MECH	MECHANICAL
MIC	MICROPHONE
MIN	MINIMUM
MISC	MISCELLANEOUS
MLO	MAIN LUGS ONLY
MM	MULTI MODE
MTD	MOUNTED
N/A	NOT APPLICABLE
NC	NORMALLY CLOSED
NEMA	NATIONAL ELECTRICAL MANUFACTURERS ASS.
NF	NON-FUSED
NFPA	NATIONAL FIRE PROTECTION ASS.
NO	NORMALLY OPEN
NTS	NOT TO SCALE
OLS	OVERLOADS
OC	ON CENTER
P	POLE
PB	PULLBOX
PNL	PANEL
PR	PAIR
PVC	POLYVINYL CHLORIDE
PWR	POWER
POC	POINT OF CONNECTION
POS	POINT OF SALES
PT	POTENTIAL TRANSFORMER
REF	REFERENCE
REM	REMARKS
RGS	RIGID GALVANIZED STEEL
RM	ROOM
RMS	ROOT-MEAN-SQUARE
RCPT	RECEPTACLE
SBB	SOUND BREAKOUT BOX
SDB	SOUND DISTRIBUTION BOX
SLC	SIGNALING LINE CIRCUIT
SM	SINGLE MODE
SPECS	SPECIFICATIONS
SPKR	SPEAKER
SPST	SINGLE POLE SINGLE THROW
SPDT	SINGLE POLE DOUBLE THROW
SR	SOUND RACK
SST	STAINLESS STEEL
ST	SHUNT TRIP
SW	SWITCH
SWBD	SWITCHBOARD
TEL	TELEPHONE
TP	TWISTED PAIR CABLE
TTB	TELEPHONE TERMINAL BOARD
TYP	TYPICAL
UON	UNLESS OTHERWISE NOTED
V	VOLT
VFD	VARIABLE FREQUENCY DRIVE
W	WATT, WIRE, WIDE
WP	WEATHERPROOF
XFMR	TRANSFORMER
XP	EXPLOSION PROOF

A4 ABBREVIATIONS

SCALE: NOT TO SCALE

C&S COMPANIES®
C&S Engineers, Inc.
1600 Market St.
Suite 3450
Philadelphia, PA 19103
Phone: (215) 709-4340
www.cscos.com

STATE OF NEW JERSEY
FRANCESCA K. NEILEY
No. GE60319
LICENSED PROFESSIONAL ENGINEER
May 8, 2024

DRBA
DELAWARE RIVER & BAY AUTHORITY

WWD HANGAR DESIGN
DELAWARE RIVER AND BAY AUTHORITY
505 FORESTAL ROAD
CAPE MAY, NJ 08242

MARK	DATE	DESCRIPTION

REVISIONS

PROJECT NO:	872.013.088
DATE:	MARCH 2024
DRAWN BY:	F.K. NEILEY, P.E.
DESIGNED BY:	F.K. NEILEY, P.E.
CHECKED BY:	S.H. SHOVA

CONTRACTOR SHALL VERIFY ALL CONDITIONS ON JOB SITE & NOTIFY THE OWNER OF ANY VARIATIONS FROM DIMENSIONS SHOWN ON THESE DRAWINGS BEFORE PROCEEDING WITH ANY CONSTRUCTION.

ELECTRICAL NOTES, SYMBOLS, ABBREVIATIONS, AND CODE COMPLIANCE

E-001

Copyright ©

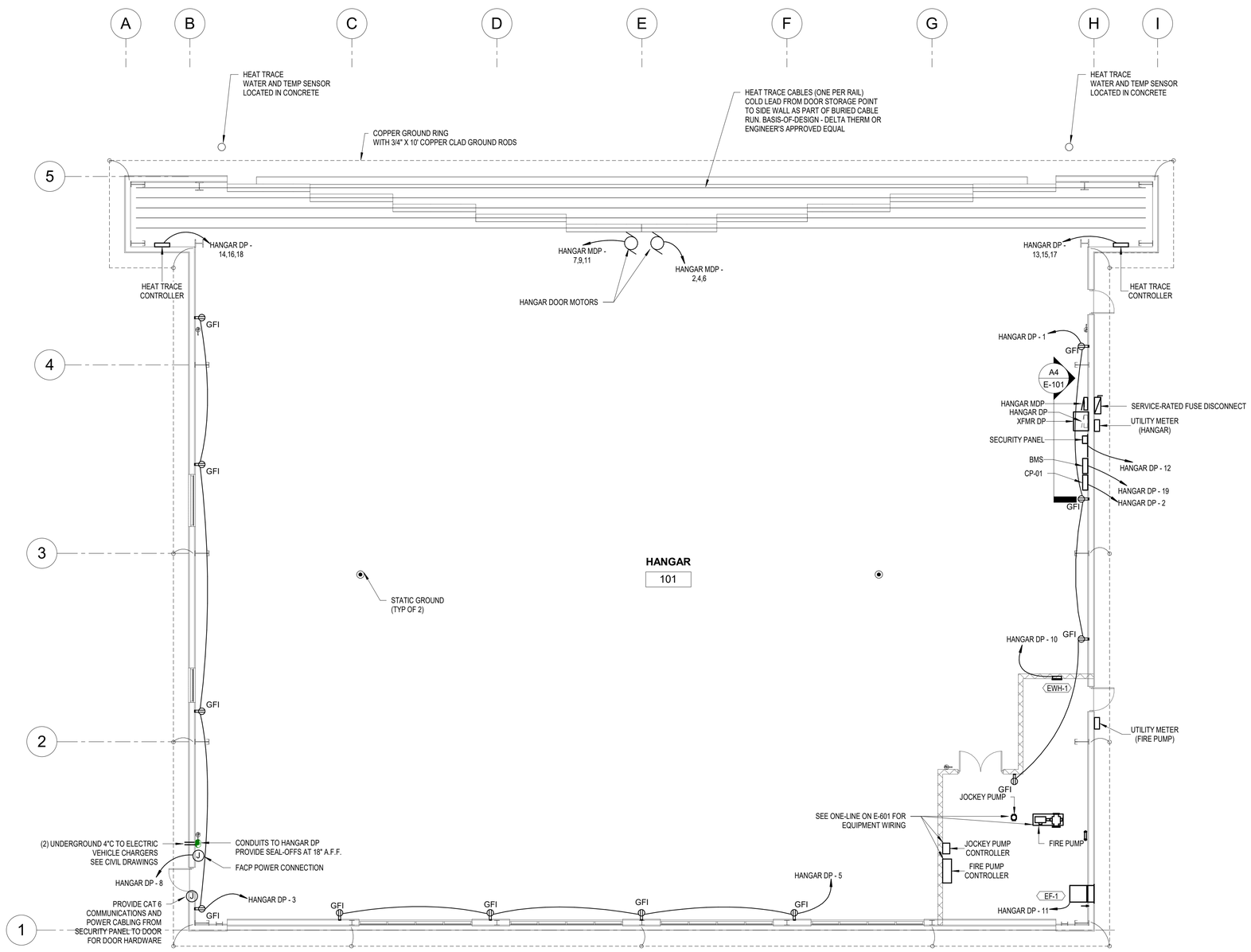

A1 FIRST FLOOR

SCALE: 1/8" = 1'-0"

0 4' 8' 16'

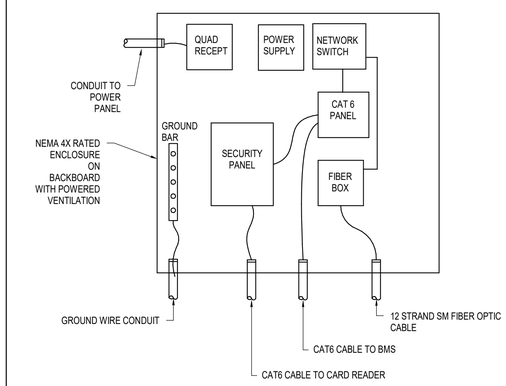

B4 COMMUNICATIONS ENCLOSURE DETAIL

SCALE: NOT TO SCALE

NOTES:

1. COMMUNICATION ENCLOSURE: PROVIDE FIBER OPTIC BOX, NETWORK SWITCH, POWER SUPPLY, RECEPTACLE, FIBER OPTIC JUMPERS, CAT6 CABLING TO BMS AND SECURITY PANEL. PROVIDE GROUND BAR AND BOND TO GROUND RING. SEE B4 THIS SHEET.
2. PROVIDE ALL REQUIRED SUPPORT STRCUTURES FOR PANEL AND TRANSFORMER MOUNTING.

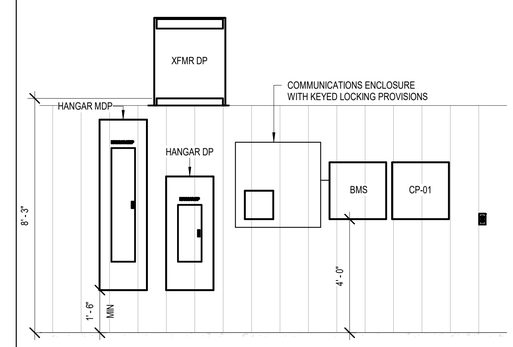

A4 ELECTRICAL EQUIPMENT ELEVATION

SCALE: NOT TO SCALE

C&S COMPANIES®

C&S Engineers, Inc.
1600 Market St.
Suite 3450
Philadelphia, PA 19103
Phone: (215) 709-4340
www.cscos.com

STATE OF NEW JERSEY
FRANCESCA K. NEILEY
No. GE60319
LICENSED PROFESSIONAL ENGINEER

May 8, 2024

DRBA
DELAWARE RIVER & BAY AUTHORITY

WWD HANGAR DESIGN
DELAWARE RIVER AND BAY AUTHORITY
505 FORESTAL ROAD
CAPE MAY, NJ 08242

MARK	DATE	DESCRIPTION

REVISIONS

PROJECT NO:	872.013.088
DATE:	MARCH 2024
DRAWN BY:	F.K. NEILEY, P.E.
DESIGNED BY:	F.K. NEILEY, P.E.
CHECKED BY:	S.H. SHOVA

CONTRACTOR SHALL VERIFY ALL CONDITIONS ON JOB SITE & NOTIFY THE OWNER OF ANY VARIATIONS FROM DIMENSIONS SHOWN ON THESE DRAWINGS BEFORE PROCEEDING WITH ANY CONSTRUCTION.

ELECTRICAL FLOOR PLAN

E-101

Copyright ©

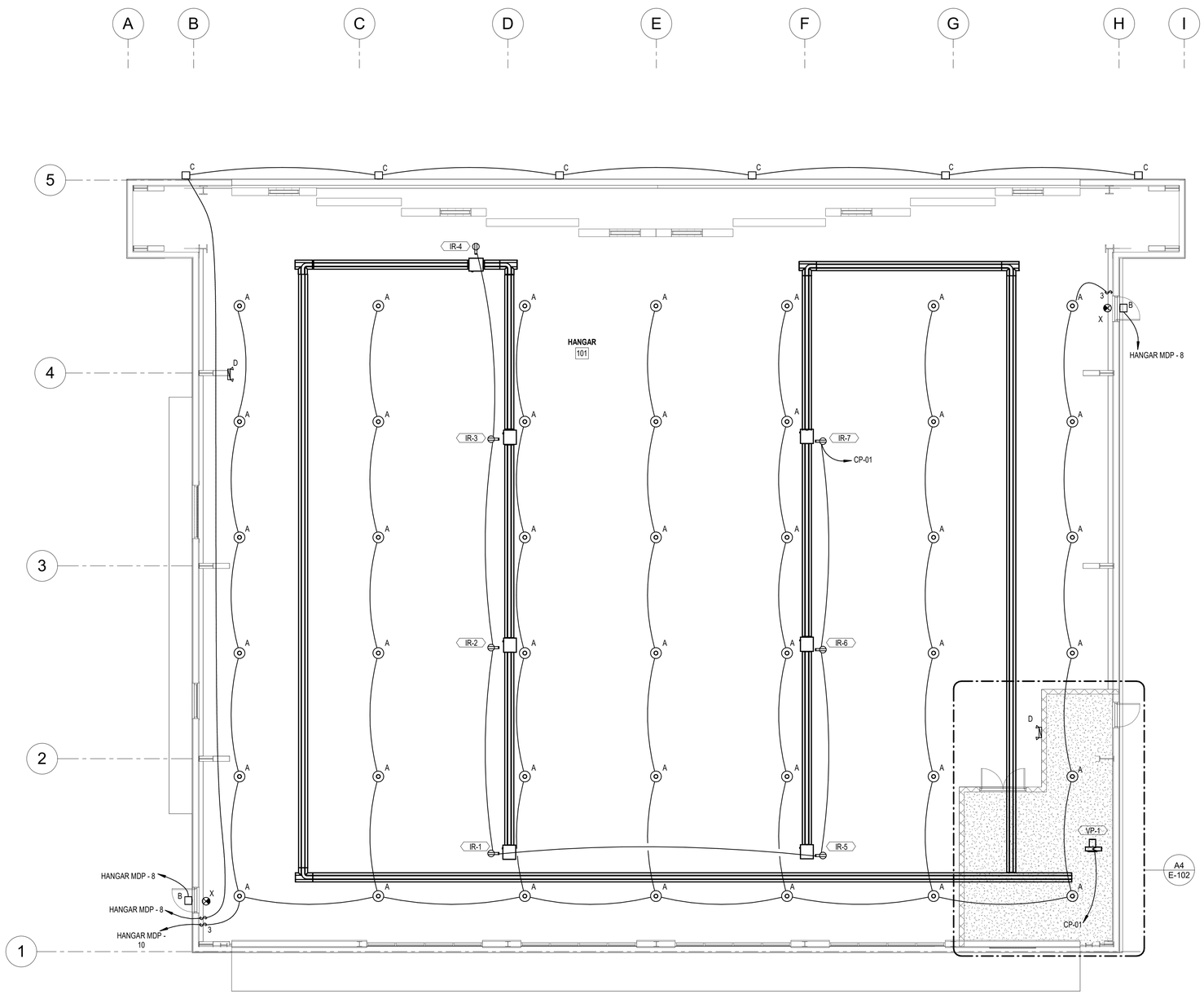

A1 FIRST FLOOR
SCALE: 1/8" = 1'-0"

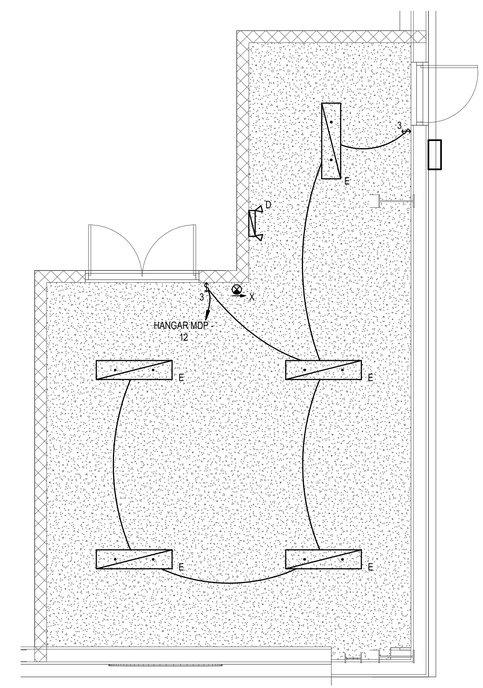

A4 FIRE PUMP ROOM - LIGHTING PLAN
SCALE: 1/4" = 1'-0"

C&S COMPANIES®
C&S Engineers, Inc.
1600 Market St.
Suite 3450
Philadelphia, PA 19103
Phone: (215) 709-4340
www.cscos.com

STATE OF NEW JERSEY
FRANCESCA K. NEILEY
No. GE60319
LICENSED PROFESSIONAL ENGINEER
May 8, 2024

DRBA
DELAWARE RIVER & BAY AUTHORITY

WWD HANGAR DESIGN
DELAWARE RIVER AND BAY AUTHORITY
505 FORESTAL ROAD
CAPE MAY, NJ 08242

MARK	DATE	DESCRIPTION

REVISIONS

PROJECT NO:	872.013.088
DATE:	MARCH 2024
DRAWN BY:	F.K. NEILEY, P.E.
DESIGNED BY:	F.K. NEILEY, P.E.
CHECKED BY:	S.H. SHOVA

CONTRACTOR SHALL VERIFY ALL CONDITIONS ON JOB SITE & NOTIFY THE OWNER OF ANY VARIATIONS FROM DIMENSIONS SHOWN ON THESE DRAWINGS BEFORE PROCEEDING WITH ANY CONSTRUCTION.

ELECTRICAL CEILING PLAN

E-102

Copyright ©

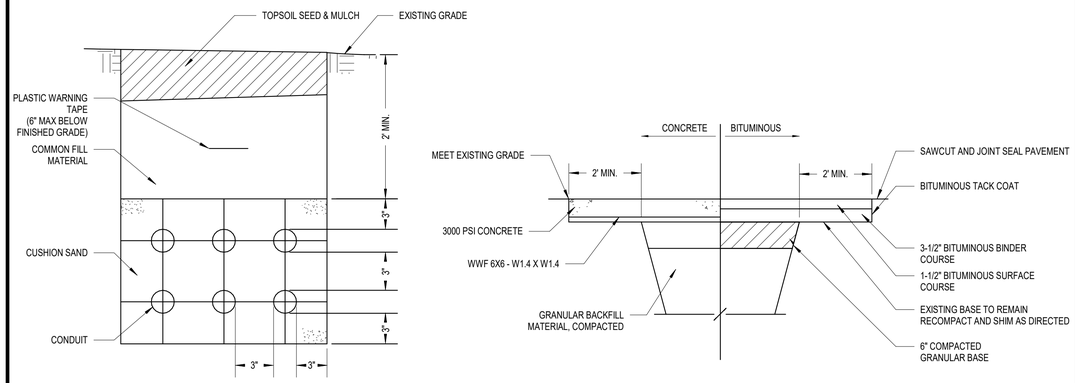

NOTES:

1. TO BE USED IN TURFED ARES AND UNDER SIDEWALKS UNLESS OTHERWISE SHOWN.
2. NUMBER OF CONDUITS AS PER PLANS.

C1 TRENCH AND RESTORATION DETAIL

SCALE: NOT TO SCALE

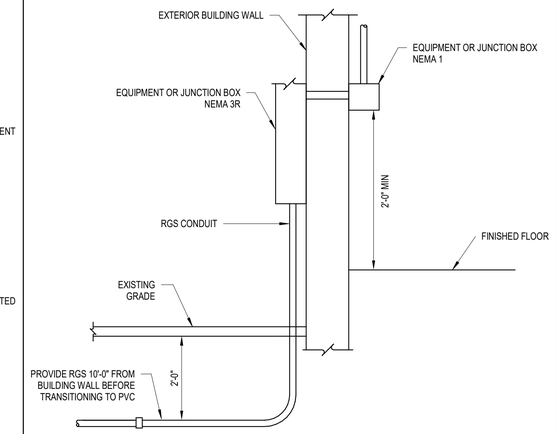

C3 CONDUIT ENTRANCE DETAIL

SCALE: NOT TO SCALE

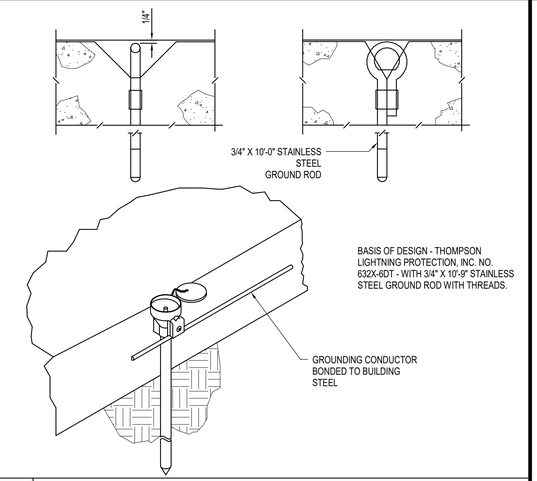

C4 STATIC GROUND RECEPTACLE

SCALE: NOT TO SCALE

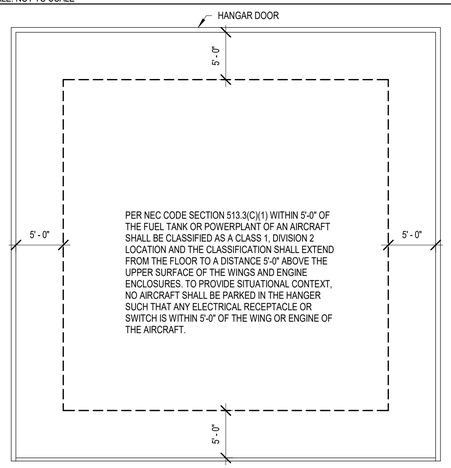

B1 HAZARDOUS AREA CLASSIFICATION

SCALE: NOT TO SCALE

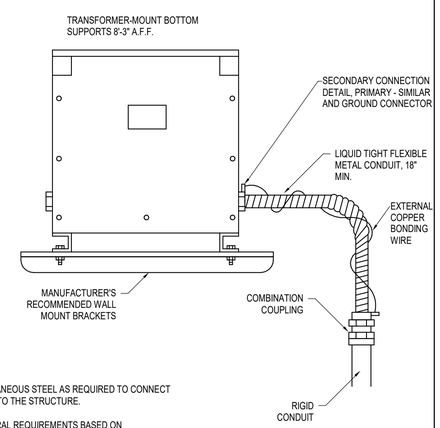

NOTES:

1. PROVIDE MISCELLANEOUS STEEL AS REQUIRED TO CONNECT THE TRANSFORMER TO THE STRUCTURE.

2. REVIEW STRUCTURAL REQUIREMENTS BASED ON TRANSFORMER KVA AND WEIGHT.

B2 TRANSFORMER MOUNTING DETAIL

SCALE: NOT TO SCALE

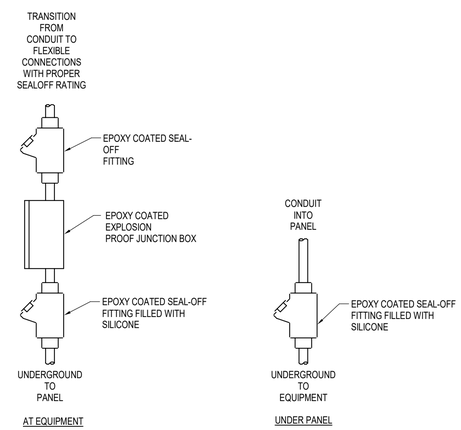

B3 CONDUIT SEAL-OFF DETAIL

SCALE: NOT TO SCALE

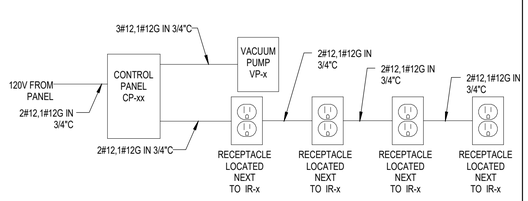

NOTE:

1. SEE FLOOR PLANS FOR EXACT NUMBER OF RECEPTACLES REQUIRED.

A1 INFRARED WIRING DETAIL

SCALE: NOT TO SCALE

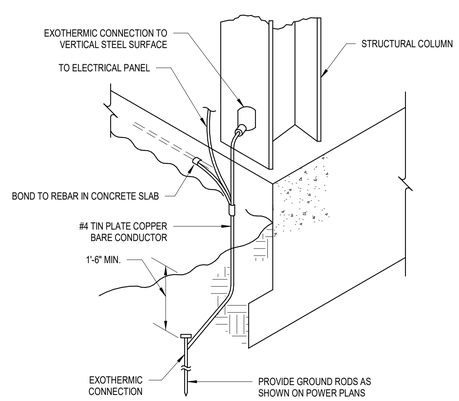

A2 GROUND BOND DETAIL

SCALE: NOT TO SCALE

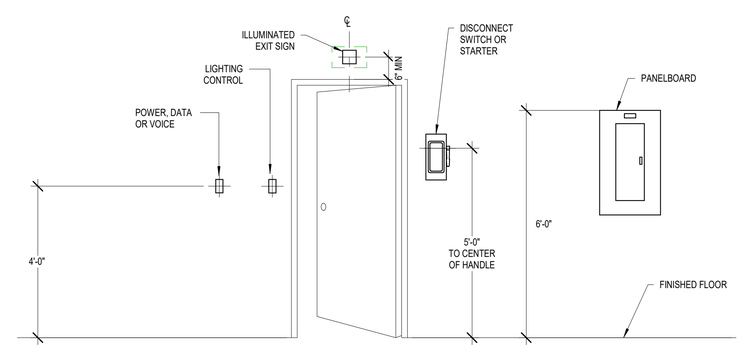

A3 DEVICE ELEVATION DETAIL

SCALE: NOT TO SCALE

C&S COMPANIES®
C&S Engineers, Inc.
1600 Market St.
Suite 3450
Philadelphia, PA 19103
Phone: (215) 709-4340
www.cscos.com

STATE OF NEW JERSEY
FRANCESCA K. NEILEY
No. GE60319
LICENSED PROFESSIONAL ENGINEER
May 8, 2024

DRBA
DELAWARE RIVER & BAY AUTHORITY

WWD HANGAR DESIGN
DELAWARE RIVER AND BAY AUTHORITY
505 FORESTAL ROAD
CAPE MAY, NJ 08242

MARK	DATE	DESCRIPTION

REVISIONS

PROJECT NO:	872.013.088
DATE:	MARCH 2024
DRAWN BY:	F.K. NEILEY, P.E.
DESIGNED BY:	F.K. NEILEY, P.E.
CHECKED BY:	S.H. SHOVA

CONTRACTOR SHALL VERIFY ALL CONDITIONS ON JOB SITE & NOTIFY THE OWNER OF ANY VARIATIONS FROM DIMENSIONS SHOWN ON THESE DRAWINGS BEFORE PROCEEDING WITH ANY CONSTRUCTION.

ELECTRICAL DETAILS

E-501

Copyright ©

PANEL SCHEDULE HANGAR MDP

BUS SIZE: 400 A
VOLTS: 480/277 Wye
PHASE: 3
WIRE: 4
POLES: 42

MAIN TYPE: MLO
GND. BAR TYPE: COPPER
SC RATING: 42
ENCLOSURE: TYPE 1

INSTALLATION: SURFACE
LOCATION:

NOTES:

CIRCUIT DESCRIPTION	WIRE SIZE	CONDUIT	CB. AM...	Poles	CKT	A	B	C	CKT	Poles	CB. AM...	CONDUIT	WIRE SIZE	CIRCUIT DESCRIPTION
					1				2					
XFMR DP			110 A	3	3				4	3	40 A	3/4"	3-#8, 1-#10	HANGAR DOORS
					5				6					
					7				8	1	20 A	3/4"	1-#12, 1-#12, 1-#12	EXTERIOR LIGHTING
HANGAR DOORS	3-#8, 1-#10	3/4"	40 A	3	9				10	1	20 A	3/4"	1-#12, 1-#12, 1-#12	INTERIOR LIGHTING
					11				12	1	20 A	3/4"	1-#12, 1-#12, 1-#12	FIRE PUMP ROOM LIGHTING
					13				14					
					15				16					
					17				18					
					19				20					
					21				22					
					23				24					
					25				26					
					27				28					
					29				30					
					31				32					
					33				34					
					35				36					
					37				38					
					39				40					
					41				42					

PANEL SCHEDULE HANGAR DP

BUS SIZE: 225 A
VOLTS: 120/208 Wye
PHASE: 3
WIRE: 4
POLES: 42

MAIN TYPE: MCB
MAIN BREAKER: 200 A
GND. BAR TYPE: COPPER
SC RATING: 42
ENCLOSURE: TYPE 1

INSTALLATION: SURFACE
LOCATION:

NOTES:

CIRCUIT DESCRIPTION	WIRE SIZE	CONDUIT	CB. AM...	Poles	CKT	A	B	C	CKT	Poles	CB. AM...	CONDUIT	WIRE SIZE	CIRCUIT DESCRIPTION
HANGAR RECEPTACLES	1-#12, 1-#12, 1-#12	3/4"	20 A	1	1				2	1	20 A	3/4"	1-#12, 1-#12, 1-#12	CP-01
HANGAR RECEPTACLES	1-#12, 1-#12, 1-#12	3/4"	20 A	1	3				4	2	50 A	4"	2-#6, 1-#10	ELECTRICAL VEHICLE CHARGER
HANGAR RECEPTACLES	1-#12, 1-#12, 1-#12	3/4"	20 A	1	5				6					
ELECTRICAL VEHICLE CHARGER	2-#6, 1-#10	4"	50 A	2	7				8	1	20 A	3/4"	1-#12, 1-#12, 1-#12	FIRE ALARM PANEL
					9				10	1	20 A	3/4"	1-#12, 1-#12, 1-#12	EWH-1
EF-1	1-#12, 1-#12, 1-#12	3/4"	20 A	1	11				12	1	20 A	3/4"	1-#12, 1-#12, 1-#12	SECURITY PANEL
					13				14					
HEAT TRACE CONTROLLER	3-#6, 1-#10	1"	60 A	3	15				16	3	60 A	1"	3-#6, 1-#10	HEAT TRACE CONTROLLER
					17				18					
BMS	1-#12, 1-#12, 1-#12	3/4"	20 A	1	19				20	1	20 A	3/4"	1-#12, 1-#12, 1-#12	COMMUNICATIONS BACKBOARD
					21				22					
					23				24					
					25				26					
					27				28					
					29				30					
					31				32					
					33				34					
					35				36					
					37				38					
					39				40					
					41				42					

NOTES:
1. ELECTRIC VEHICLE CHARGERS - PROVIDE POWERCHARGE ELECTRIC CHARGING STATION OR APPROVED EQUAL. 208V 1PH INPUT, 40A/9.7KW, STANDARD 18' CORD. PAID FOR UNDER ITEM 262726-1.4-B-2.

CONTRACT RESPONSIBLE		ENCLOSURE		DISCONNECT TYPE		STARTER TYPE		CONTROLS		LOCATION	
G	GENERAL	1	NEMA 1 - INDOOR GENERAL	1	NON-FUSED SAFETY SWITCH	1	MAGNETIC X-LINE	1	START/STOP PB W/PILOT LIGHT IN COVER	A	AT EQUIPMENT
M	MECHANICAL	3R	NEMA 3R - EXTERIOR RAINPROOF	2	FUSED SAFETY SWITCH	2	COMBINATION X-LINE	2	H-O-A SWITCH W/PILOT LIGHT ON COVER	B	REMOTE
H	HVAC	4	NEMA 4 - OUTDOOR WATERTIGHT	3	TOGGLE SWITCH	3	MANUAL	3	AUXILIARY CONTACTS	C	IN MOTOR CONTROL CENTER
E	ELECTRICAL	4X	NEMA 4X - CORROSION RESISTANT	4	INTEGRAL TO STARTER	4	REDUCED VOLTAGE	4	CONTROL TRANSFORMER	D	IN MECHANICAL ROOM
P	PLUMBING	7	NEMA 7 - INDOOR EXPLOSION PROOF	5	CORD & PLUG	5	VFD	5	PROVIDED BY EQUIPMENT MANUFACTURER	E	IN ELECTRICAL ROOM
FP	FIRE PROTECTION	12	NEMA 12 - INDOOR DUST-TIGHT	6	PART OF CONTROL PANEL	6	SOFT START	6	REMOTE PUSHBUTTON STATIONS	F	OTHER (SEE REMARKS)
C	COMMUNICATIONS	13	NEMA 13 - INDOOR OIL TIGHT	7	BY EQUP. MANF.	7	TWO-SPEED	7	PART OF DIRECT DIGITAL CONTROL SYSTEM (DDC)		
O	OWNER			8	OTHER (SEE REMARKS)	8	BY EQUP. MANF.	8	CONTROL PANEL		
						9	OTHER (SEE REMARKS)	9	OTHER (SEE REMARKS)		

EQUIPMENT CONNECTION SCHEDULE

EQUIPMENT			ELECTRICAL/COMM SUPPLY							DISCONNECT				STARTER				
UNIT NO.	FURN. BY	LOCATION	HP	KW	MCA	AMPS	MOCP	VOLT	PHASE	TYPE	SIZE	ENCL	LOCATION	TYPE	SIZE	ENCL	LOCATION	REMARKS
EF-1	M	FIRE PUMP ROOM	1/4					120 V	1	3	-	1	A	8	-	1	A	
EWH-1	M	FIRE PUMP ROOM		1800	20			120 V	1	7	-	1	A	8	-	1	A	
IR-1	M	HANGAR 101			0.3			120 V	1	5	-	1	A	8	-	1	A	
IR-2	M	HANGAR 101			0.3			120 V	1	5	-	1	A	8	-	1	A	
IR-3	M	HANGAR 101			0.3			120 V	1	5	-	1	A	8	-	1	A	
IR-4	M	HANGAR 101			0.3			120 V	1	5	-	1	A	8	-	1	A	
IR-5	M	HANGAR 101			0.3			120 V	1	5	-	1	A	8	-	1	A	
IR-6	M	HANGAR 101			0.3			120 V	1	5	-	1	A	8	-	1	A	
IR-7	M	HANGAR 101			0.3			120 V	1	5	-	1	A	8	-	1	A	
VP-1	M	HANGAR 101	3/4					120 V	1	3	-	1	A	8	-	1	A	

MASTER LUMINAIRE SCHEDULE LED

FIXTURE LABEL	MANUFACTURER	MODEL NUMBER	LAMP TYPE	VOLTS	DRIVER	LUMENS PER UNIT	COLOR TEMP / CRI	MOUNTING	REMARKS
A	COOPER LIGHTING	SSLED-LD5-15-W-UNV-L840-CD1 OR APPROVED EQUAL	LED	277	LED DRIVER	15000	4000K	31' 6" A.F.F.	
B	NLS LIGHTING	HRM-1-T4-16L-1-40K8-UNV-WM-BRZ-PC-EM8 OR APPROVED EQUAL	LED	277	LED DRIVER	3984	4000K	WALL	
C	NLS LIGHTING	NV-1-T4-32L-1-40K8-UNV-WM OR APPROVED EQUAL	LED	277	LED DRIVER	12826	4000K	WALL	
D	JADEMAR	JEM-AO OR APPROVED EQUAL	LED	277	LED DRIVER	-	-	WALL	
E	H.E. WILLIAMS	96-4-L40/840-HIAFR-SSCMB-DRV-UNV OR APPROVED EQUAL	LED	277	LED DRIVER	4000	4000K	SUSPENDED 9'-0" A.F.F.	
X	JADEMAR	JESC-AO-SF-R-WH-RC-SDT OR APPROVED EQUAL OR APPROVED EQUAL	2W LED	277	EM/NON-DM	-	-	SURFACE	

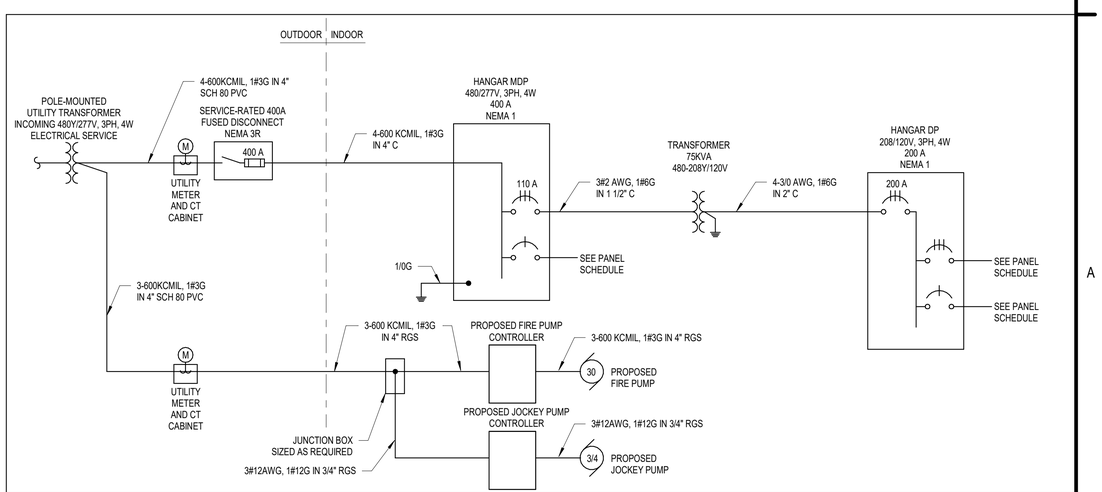

A3 ONE-LINE DIAGRAM
SCALE: NOT TO SCALE

C&S COMPANIES®
C&S Engineers, Inc.
1600 Market St.
Suite 3450
Philadelphia, PA 19103
Phone: (215) 709-4340
www.cscos.com

STATE OF NEW JERSEY
FRANCESCA K. NEILEY
No. GE60319
LICENSED PROFESSIONAL ENGINEER
May 8, 2024

DRBA
DELAWARE RIVER & BAY AUTHORITY

WWD HANGAR DESIGN
DELAWARE RIVER AND BAY AUTHORITY
505 FORESTAL ROAD
CAPE MAY, NJ 08242

MARK	DATE	DESCRIPTION

REVISIONS

PROJECT NO: 872.013.088
DATE: MARCH 2024
DRAWN BY: F.K. NEILEY, P.E.
DESIGNED BY: F.K. NEILEY, P.E.
CHECKED BY: S.H. SHOVA

CONTRACTOR SHALL VERIFY ALL CONDITIONS ON JOB SITE & NOTIFY THE OWNER OF ANY VARIATIONS FROM DIMENSIONS SHOWN ON THESE DRAWINGS BEFORE PROCEEDING WITH ANY CONSTRUCTION.

ELECTRICAL SCHEDULES AND ONE-LINE DIAGRAM

E-601

Copyright ©

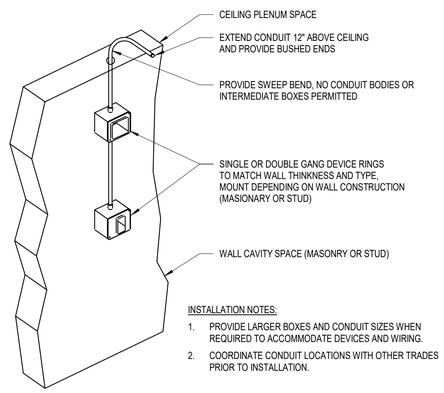

INSTALLATION NOTES:

1. PROVIDE LARGER BOXES AND CONDUIT SIZES WHEN REQUIRED TO ACCOMMODATE DEVICES AND WIRING.
2. COORDINATE CONDUIT LOCATIONS WITH OTHER TRADES PRIOR TO INSTALLATION.

B2 RECESS MOUNTED FIRE ALARM DEVICE RACEWAY

SCALE: NO SCALE

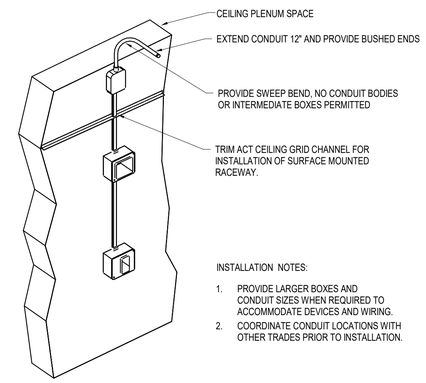

INSTALLATION NOTES:

1. PROVIDE LARGER BOXES AND CONDUIT SIZES WHEN REQUIRED TO ACCOMMODATE DEVICES AND WIRING.
2. COORDINATE CONDUIT LOCATIONS WITH OTHER TRADES PRIOR TO INSTALLATION.

B3 SURFACE MOUNTED FIRE ALARM DEVICE RACEWAY

SCALE: NOT TO SCALE

SCOPE OF WORK:

THE SCOPE OF WORK SHALL INCLUDE THE FOLLOWING:

1. THE LAYOUT, INSTALLATION, AND TESTING OF NEW DEDICATED FUNCTION FIRE ALARM SYSTEM FOR THE NEW GROUP III HANGAR.
2. PROVIDE WIRING IN RACEWAYS, TEST NEW DEVICES, AND INSTALL PROGRAMMING AS APPLICABLE.
3. ACCEPTANCE TESTING OF SYSTEM PER NFPA 72.
4. SUBMISSION OF DOCUMENTATION AS REQUIRED.

APPLICABLE CODES:

1. 2021 NEW JERSEY BUILDING CODE.
2. 2021 NEW JERSEY FIRE CODE.
3. NFPA 72 - 2019, NATIONAL FIRE ALARM AND SIGNALING CODE.
4. NFPA 70 - 2020, NATIONAL ELECTRICAL CODE.

DESIGN CRITERIA:

1. THE DESIGN DOCUMENTS PROVIDED HEREIN IDENTIFY THE MINIMUM SYSTEM REQUIREMENTS, IN ACCORDANCE WITH THE ABOVE REFERENCED CODES AND REGULATIONS.
2. INSTALLATION PERSONNEL SHALL BE SUPERVISED BY PERSONS WHO ARE QUALIFIED AND EXPERIENCED IN THE INSTALLATION OF, INSPECTION, AND TESTING OF FIRE ALARM SYSTEMS. EXAMPLES OF QUALIFIED PERSONNEL SHALL INCLUDE BUT NOT BE LIMITED TO:
   A. FACTORY TRAINED AND CERTIFIED PERSONNEL
   B. NICET LEVEL III OR HIGHER CERTIFIED PERSONNEL
   C. PERSONNEL LICENSED OR CERTIFIED BY THE STATE OR LOCAL AUTHORITY, PER NFPA 72
3. THE FIRE ALARM SYSTEM SHALL BE FULLY ADDRESSABLE AND REPORT TO AN APPROVED CENTRAL STATION IN ACCORDANCE WITH NFPA 72.
4. THE FIRE ALARM SYSTEM WIRING SUPERVISION SHALL BE IN ACCORDANCE WITH NFPA 72.
   A. SIGNALING LINE CIRCUITS: CLASS B
   B. NOTIFICATION APPLIANCE CIRCUITS: CLASS B
5. THE FIRE ALARM SYSTEM SHALL FUNCTION IN ACCORDANCE WITH NFPA 72.
6. ALL DEVICES AND EQUIPMENT INSTALLED OUTSIDE SHALL BE WEATHERPROOF AND LISTED FOR OUTDOOR USE.
7. ALL CONDUCTORS IN EXPOSED AREAS OR CONCEALED IN WALLS SHALL BE INSTALLED IN RED EMT CONDUIT. CONDUIT HANGER AND MATERIAL, SPACING, AND METHOD OF ATTACHMENT SHALL BE PER NFPA 70, NFPA 72, AND MANUFACTURER'S RECOMMENDATIONS.
8. NOTIFICATION APPLIANCE CIRCUITS SHALL BE 14 GUAGE OR LARGER 2-CONDUCTOR THHN CABLE. FIRE ALARM CONTRACTOR SHALL PERFORM AND SUBMIT BATTERY BACKUP AND VOLTAGE DROP CALCULATIONS TO ENSURE VOLTAGE AT FINAL DEVICE IS ACCEPTABLE PER THE FIRE ALARM MANUFACTURER AND SUFFICIENT STANDBY POWER IS AVAILABLE FOR 12 HOURS OF STANDBY OPERATION FOLLOWED BY 5 MINUTES OF ALARM.
9. SIGNALING LINE CIRCUITS SHALL BE 18 GAUGE OR LARGER 2-CONDUCTOR FPLR CABLE. FIRE ALARM CONTRACTOR SHALL DETERMINE CABLE BASED ON FIRE ALARM MANUFACTURER REQUIREMENTS AND CABLE LENGTH LIMITATIONS.
10. USE SUITABLE CABLE FITTINGS AND CONNECTORS WHERE CABLE ENTERS/EXITS ALL JUNCTION AND DEVICE BACK BOXES. LEAVE 18" EXCESS CABLE AT EACH TERMINATION AT A DEVICE AND OTHER SYSTEM OUTLET. LEAVE 6' EXCESS CABLE AT EACH TERMINATION AT SYSTEM CONTROL PANELS OR POWER SUPPLIES.
11. SPLICE CABLE ONLY IN ACCESSIBLE JUNCTION BOXES OR AT TERMINAL BLOCK UNITS. THERE SHALL BE NO T-TAPPING OF SLC CIRCUITS BETWEEN TERMINAL CABINETS AND THE LAST INITIATING DEVICE ON THE SLC CIRCUIT. THE ONLY T-TAPPING IN THE SYSTEM SHALL TAKE PLACE AT THE TERMINAL CABINETS. MAKE CABLE SHIELDS CONTINUOUS AT ALL SPLICES AND CONNECT CIRCUIT SHIELD TO EQUIPMENT GROUND ONLY AT SOURCE END.
12. SPRINKLER VALVE TAMPER SWITCHES AND WATER FLOW SWITCHES SHALL BE PROVIDED BY FIRE SPRINKLER CONTRACTOR. FIRE ALARM CONTRACTOR SHALL PROVIDE, INSTALL, WIRE, AND PROGRAM MONITOR MODULES. MONITOR MODULES SHALL BE MOUNTED NOT MORE THAN 3' FROM DEVICE/EQUIPMENT BEING MONITORED. FIRE ALARM CONTRACTOR SHALL SUPERVISE ALL VALVES AND OTHER SUPERVISORY POINTS INDICATING OFF-NORMAL CONDITION OF OR NEED FOR ACTION FOR THE FIRE PROTECTION SYSTEMS WITHIN THE BUILDINGS.
13. HEAT DETECTORS SHALL BE MOUNTED IN RELATION TO HEAT PRODUCING EQUIPMENT. COORDINATE INSTALLATION WITH ALL OTHER TRADES. ALL SMOKE AND HEAT DETECTORS SHALL BE AT LEAST 12" FROM ANY PART OF A LIGHT FIXTURE AND A MINIMUM OF 3' FROM AIR DIFFUSERS/RETURN GRILLES OR AIR HANDLING SYSTEMS. SMOKE DETECTORS SHALL NOT BE INSTALLED UNTIL CONSTRUCTION IS ESSENTIALLY COMPLETE AND THE BUILDING HAS BEEN THOROUGHLY CLEANED. MERELY PROVIDING DETECTORS WITH FACTORY DUST COVERS AND INSTALLING EARLY IN CONSTRUCTION OF THE PROJECT IS NOT ACCEPTABLE. IF DETECTORS ARE INSTALLED PRIOR TO THE FULL FINAL CLEANING OF THE BUILDING, THE FIRE ALARM CONTRACTOR SHALL REMOVE EVERY DETECTOR IN THE BUILDING AND HAVE THEM THOROUGHLY CLEANED AND RECERTIFIED BY A FACTORY CERTIFIED TECHNICIAN.
14. FIRE ALARM SYSTEM SHALL INCLUDE FULL IDENTIFICATION. ALL SYSTEM CONDUIT, JUNCTION BOXES, TERMINAL BOXES, PULL BOXES, AND COVERS SHALL BE RED IN CONCEALED SPACES AND SHALL BE IDENTIFIED WITH ENGRAVED LABELS BY THE ZONE AND CIRCUIT IT CONTAINS. ALL LB'S AND SIMILAR UNITS SHALL BE THE COLOR RED IN CONCEALED SPACES. ALL CONDUIT, BOXES, AND COVERS LOCATED IN EXPOSED AREAS SHALL BE THE COLOR RED AND PROVIDED WITH ENGRAVED LABELS. LABEL ALL FIRE ALARM DEVICES WITH ADDRESSES. ONLY PRINTED STICK ON TYPE LABELS SHALL BE USED. LABELING DEVICE WITH MARKERS IS NOT ACCEPTABLE. THE PRINTED STICK ON TYPE LABELS MUST BE VISIBLE UPON APPROACH TO THE DEVICE AND BE MADE OF SUCH A MATERIAL TO RESIST FADING OR EASY REMOVAL.
15. ALL PENETRATIONS THROUGH FIRE/SMOKE RATED ASSEMBLIES SHALL BE FIRE STOPPED. FIRE STOPPING SHALL BE OF U.L. LISTED ASSEMBLY.
16. CONTRACTOR SHALL SUBMIT FOR REVIEW TO THE ENGINEER OF RECORD (THROUGH THE APPROPRIATE PARTIES) COMPLETE SHOP DRAWINGS OF THE FIRE ALARM SYSTEMS, MATERIAL DATA, AND CALCULATIONS AT THE SAME TIME. INCOMPLETE SUBMITTALS WILL BE RETURNED WITHOUT REVIEW. SHOP DRAWINGS SHALL INCLUDE AT MINIMUM: WORKING PLANS WITH ALL APPLIANCES, DEVICES, INTERCONNECTIONS, AND POINT TO POINT WIRING SHOWN, BATTERY CALCULATIONS, VOLTAGE DROP CALCULATIONS, AND ALL REQUIRED MATERIAL DATA. SHOP DRAWINGS SHALL INDICATE ALL ITEMS IDENTIFIED IN NFPA 72 AND THE FOLLOWING: ADDRESSABLE APPLIANCE ADDRESS, CONDUCTOR SIZE, NON-TYPICAL RISER DIAGRAM, AND NAME AND MAKE OF EACH DEVICE/APPLIANCE.

A4 FIRE ALARM GENERAL NOTES

SCALE: NOT TO SCALE

FIRE ALARM CABLE LEGEND	
SYMBOL	CONDUCTOR
SLC	1 PAIR #18 AWG
120 VAC	1 PAIR + GROUND #12 AWG
NAC	1 PAIR #14 AWG
AUX	1 PAIR #14 AWG

A2 FIRE ALARM CABLE LEGEND

SCALE: NOT TO SCALE

SYMBOL	DESCRIPTION
FACP	FIRE ALARM CONTROL PANEL
MM FS	MONITOR MODULE FOR FLOW SWITCH
MM TS	MONITOR MODULE FOR TAMPER SWITCH
MM	MONITOR MODULE
?	SMOKE DETECTOR

A3 FIRE ALARM SYMBOLS

SCALE: NOT TO SCALE

C&S COMPANIES®
C&S Engineers, Inc.
1600 Market St.
Suite 3450
Philadelphia, PA 19103
Phone: (215) 709-4340
www.cscos.com

STATE OF NEW JERSEY
FRANCESCA K. NUTTY
No. GE60319
LICENSED PROFESSIONAL ENGINEER
May 8, 2024

DRBA
DELAWARE RIVER & BAY AUTHORITY

WWD HANGAR DESIGN
DELAWARE RIVER AND BAY AUTHORITY
505 FORESTAL ROAD
CAPE MAY, NJ 08242

MARK	DATE	DESCRIPTION

REVISIONS

PROJECT NO:	872.013.088
DATE:	MARCH 2024
DRAWN BY:	V. ZAWACKI
DESIGNED BY:	V. ZAWACKI
CHECKED BY:	B. DONNER

CONTRACTOR SHALL VERIFY ALL CONDITIONS ON JOB SITE & NOTIFY THE OWNER OF ANY VARIATIONS FROM DIMENSIONS SHOWN ON THESE DRAWINGS BEFORE PROCEEDING WITH ANY CONSTRUCTION.

SYMBOL LIST, ABBREVIATIONS, AND NOTES

FA-001

Copyright ©

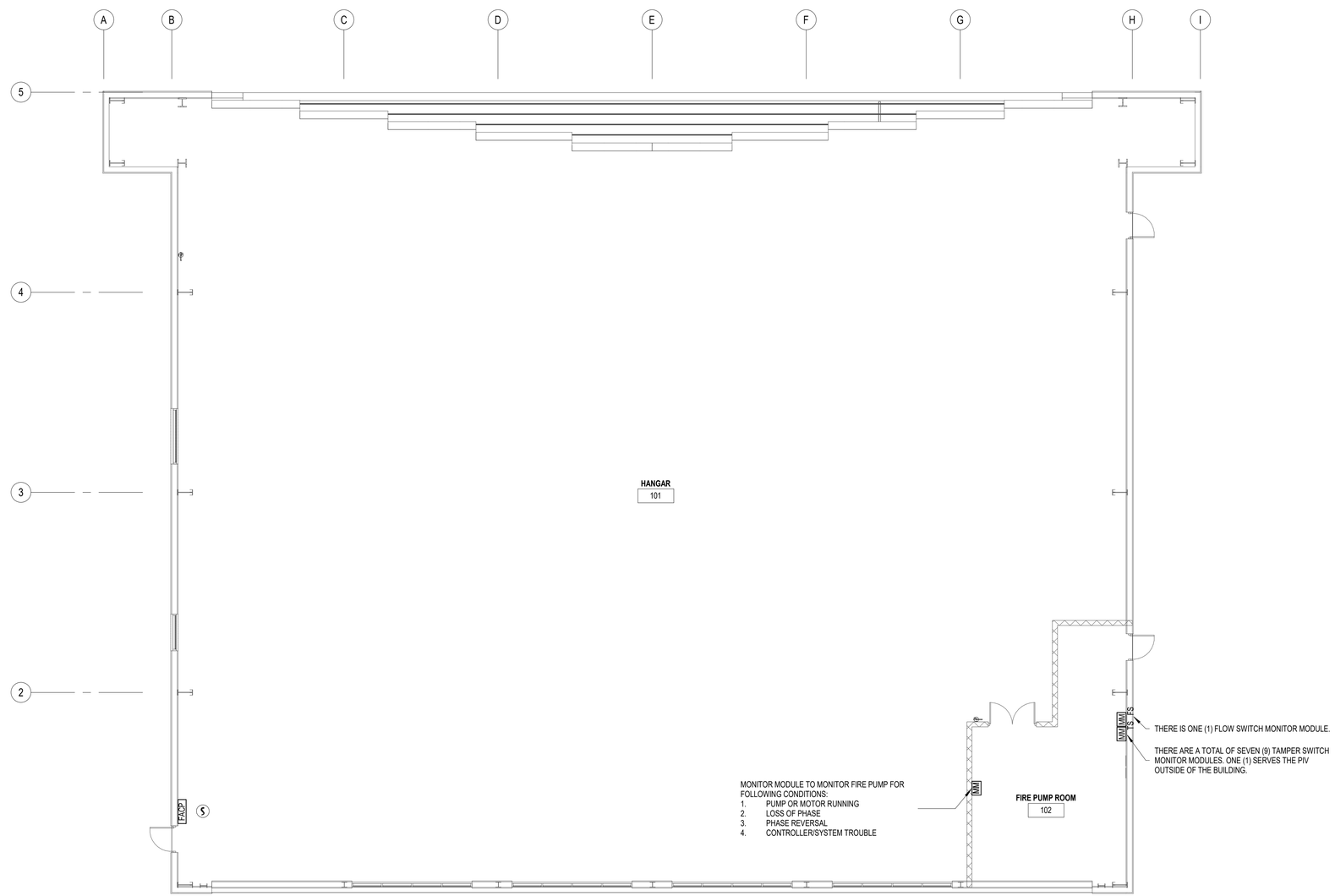

A1 FIRE ALARM FLOOR PLAN
SCALE: 1/8" = 1'-0"

0 4' 8' 16'

C&S COMPANIES®
C&S Engineers, Inc.
1600 Market St.
Suite 3450
Philadelphia, PA 19103
Phone: (215) 709-4340
www.cscos.com

STATE OF NEW JERSEY
FRANCESCA K. NEILEY
No. GE60319
LICENSED PROFESSIONAL ENGINEER
May 8, 2024

DRBA
DELAWARE RIVER & BAY AUTHORITY

WWD HANGAR DESIGN
DELAWARE RIVER AND BAY AUTHORITY
505 FORESTAL ROAD
CAPE MAY, NJ 08242

MARK	DATE	DESCRIPTION

REVISIONS

PROJECT NO:	872.013.088
DATE:	MARCH 2024
DRAWN BY:	V. ZAWACKI
DESIGNED BY:	V. ZAWACKI
CHECKED BY:	B. DONNER

CONTRACTOR SHALL VERIFY ALL CONDITIONS ON JOB SITE & NOTIFY THE OWNER OF ANY VARIATIONS FROM DIMENSIONS SHOWN ON THESE DRAWINGS BEFORE PROCEEDING WITH ANY CONSTRUCTION.

FIRE ALARM FLOOR PLAN

FA-101

Copyright ©